SAGOLA®

an Elcometer company

2026/27

AUTOMOTIVE REFINISHING AND INDUSTRIAL BODYSHOP

PROFESSIONAL EQUIPMENT

For more than **70 years** we have worked hard to be the best at what we do, so you can be the best at what you do.

Since 1955

SAGOLA can trace its origins to the year 1955 and is fruit of the pioneering spirit of its founder, **Alejandro Sánchez Larrauri**.

It began as a small subcontracting workshop for industry. After some years in the subcontracting sector, Larrauri felt the need to manufacture his own product and progressively withdrew from subcontracted activity.

International expansion

Due once again to the entrepreneurial spirit of the SAGOLA team, the need was felt to open the company to the international market. For that reason the Company began operating in related markets such as Latin America, where it soon became the indisputable leader, later expanding to Arab countries, Asia and finally Europe. Today, SAGOLA is present in more than 80 countries worldwide.

SAGOLA has maintained the highest quality standards in the manufacture of its products from its very beginnings, which has contributed to becoming a very important competitor in sectors such as bodyshop and industry.

Elcometer Group

In 2020, SAGOLA has became part of a much larger business group. The ELCOMETER Group. Headquartered in the UK, Elcometer is also a family business and has been owned by the Sellars family for seven generations. Beginning in the 19th century as a chemical company, Elcometer, headquartered in Manchester, UK, has grown into one of the world's leaders in the design, manufacture and supply of equipment for the coating and non-destructive testing industries (END).

Elcometer exports more than 90% of the products it manufactures through its offices in France, Germany, Japan, the Netherlands, Singapore, the United Arab Emirates and the USA and its global distribution network that covers more than 170 countries throughout the world.

Like Sagola, the philosophy of the Elcometer company is to integrate quality into all aspects of the products they design and manufacture, while being very aware of the environment that surrounds us. Elcometer's commitment is reflected in its ISO 9001 and 14001 Quality and Environmental accreditations.

Evolution and Innovation

Since our beginnings, SAGOLA has always maintained the highest quality standards in its products and production processes, facilitating the most demanding coating processes.

All of this has made SAGOLA what it is today, a company and a brand recognised not only in the domestic market, but in more than 80 countries worldwide.

We have more than 70 years of experience as manufacturers of spray guns and spraying equipment

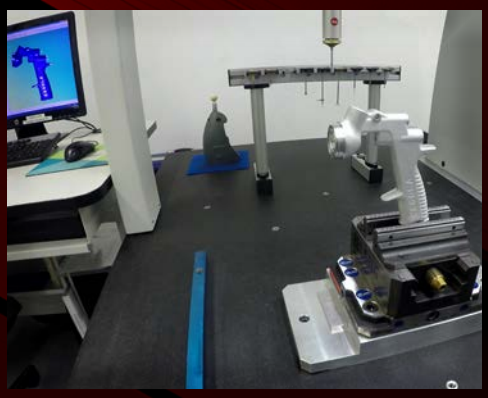

After more than 70 years making and developing new products, we are convinced of the need to establish a close relation with our clients on a day-to-day basis.

We know that the best product is based on the proper development of what is demanded by the market at each moment in time. For that reason we constantly reinforce our training and sales and marketing personnel, which is in permanent contact with the market and its needs all over the world.

The quality of our products is acknowledged in more than eighty countries. SAGOLA has a vast experience and owns know-how in the manufacture of professional coating systems.

Human resources

SAGOLA is a worldwide benchmark brand thanks to the highly qualified professionals in our team. Notwithstanding, this team continues to work towards the objective of consolidating the SAGOLA brand as the industry yardstick.

Strengthening our human resources is SAGOLA's principal objective

Since its inception, SAGOLA has been characterized by merging manufacturing technologies, production means and manufacturing processes with a highly qualified human team.

The **high technical level** of our production guarantee the **high quality** of our products.

Research and Development

Our commitment to R+D is absolutely clear. We devote all our efforts in this department to assuring that our products are adapted to the needs of the market.

Our objective is that between both parties and the innovations generated at our headquarters, clients will regard SAGOLA as a safe bet and stay loyal to a brand which researches on a day-to-day basis to develop products which answer their needs.

Optimisation and Self-improvement

When it comes to service we are talking about a deeply rooted culture arising from the history of SAGOLA, to which service is vital.

The robotic automation of all our warehouses is an example, a major investment which gives us and advantage over the competition when it comes to offering a fast, reliable response which the market appreciates.

The quality as a brand

If the SAGOLA brand plays an important role on the market after more than 70 years of history, this is due to the emphasis placed on QUALITY.

At our factory in Vitoria (Spain), each department you visit is steeped in an atmosphere of quality.

At the beginning the founder, Alejandro Sánchez, was able to transmit this vital concept and more than 70 years later his heritage on this point remains as vital as on the first day.

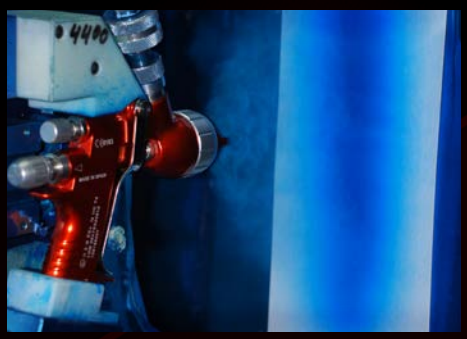

Warranty

SAGOLA provides a 3-year guarantee with the main products.

We know this is the best way of showing our customers that we believe in our products and that our guarantee will make our past and present customers loyal in the future.

From its very beginnings SAGOLA has showed marked interest in advances related to care of and **respect** for the **environment**.

Environment

Since the very first developments regarding VOC emissions to the atmosphere, SAGOLA wanted to be a cutting-edge company by implementing new environmental regulations and systems for its products.

With the inclusion of EPA and HVLP systems, as well as progress made in the field of filtration and others, we believe that we can contribute on a daily basis through new developments in our innovation policy.

Our commercial office and training team are amongst the pillars of the SAGOLA BRAND worldwide

Our training team and the entire company believes that there is an important difference between being merely a quality manufacturer and being a manufacturer which develops and trains workgroups for the various sectors in which we are present.

Sales and Marketing

We believe that the products we make always need a solid sales support. Our commercial partners all over the world appreciate our assistance in setting up their sales networks and technical teams.

Thanks to the efforts of both, we embark upon each new financial year resting on a solid base suitable for the construction of a long-term project. Courses are available both at our Vitoria headquarters and on site.

Customer service

This department is aware that our sales effort requires its support when responding to particular dilemmas, problems or needs related to specific queries we are constantly receiving from all over the world. These are transmitted rapidly to qualified experts who provide immediate data and solutions.

The sectors in which we have traditionally had a presence have always considered us a leading brand, but to stay that way all the players in each sector demand that our developments take account of the changes taking place in each field. We therefore have different product lines for each segment in accordance with its needs.

Bodyshop

This is the sector most often identified with SAGOLA, and in many ways the sector which sets the standard for all the others as far as paints and performance are concerned.

Apart from our list of annexes, for this sector we detail our star products in quality and sales volume.

Industrial Vehicle

This sector recognises in SAGOLA an established manufacturer of coating spray guns and equipment. The brand is closely associated with reliability, quality and convenience at work, contributing confidence to the comercial vehicle distribution network.

Industrial Supplies

This is a constantly developing sector in which SAGOLA has always been the reference, with special finishes equipment for pressure and special pumps for products specifically developed for this sector.

Dedicated to continuous improvement in **quality**, **service** and **management**.

Our business partners are aware that SAGOLA, as well as contributing a quality brand, provides them with a manufacturer who has won their loyalty by dint of constant effort over the years. This is something we strive for every day.

We are aware that our development and innovation will be our best allies along with the loyalty of our users in the future.

SAGOLA has always been export-oriented and has achieved a notable expansion

We have always had an export-oriented attitude. We are currently present in more than 80 countries and keep on growing to ensure that our brand, and the products it represents, reach the entire world with the invaluable help and support of our importers.

The **loyalty** of our users is one of our closest allies, in conjunction with **innovation**.

All **painting guides** are available on our website.

Approved Manufacturers

Our relationship with painting manufacturers around the world means that launching SAGOLA in a new market is easier for us.

Our homologations make the market more active because users know that the product they are buying has been tested and homologated by their paint brand.

For many years, SAGOLA has devoted all its efforts not only on improving the quality of its products and service, but also to improve all aspects related with management, HR, environment, etc.

More than 60 industrial patents/models registered worldwide CEE / UK / ASIA/ USA:

- Manual Spray Guns
- Automatic Spray Guns
- Packing Nuts
- Blow Guns
- Air Caps
- Valves
- Deposits
- Keys, Accessories

As a reference it is worth noting that SAGOLA was one of the first companies in Spain to obtain ISO certification, which meant a new management model where improvisation was forgotten and gave way to a management organization fully controlled and automated.

In 2023, Sagola received Nadcap® accreditation for demonstrating their ongoing commitment to quality by satisfying customer requirements and industry specifications.

The commitment to the environment by SAGOLA has always been one of its main objectives. This is the reason why SAGOLA has been a pioneer in the manufacture of equipment for low-emission paint solvent to the atmosphere. We were pioneers in meeting environmental regulations as strict as the 1151 of the US California State SCAQMD.

On the other hand the commitment to uphold the highest standards of security makes the manufacture of our products to evolution continuously in its design and manufacturing process. Therefore our standard products meet CE, ATEX, IP54, etc.

SAGOLA is a company which spends significant resources in R&D and is always in constant evolution. As a result of this investigation and due to the need of protection of our own Know-how, SAGOLA is very active in all related with the intellectual property, being owner of a large number of patents worldwide.

Undoubtedly, SAGOLA is a recognized brand worldwide so in this aspect, the protection levels of our brand worldwide are very high.

SAGOLA has got registered its different brands (SAGOLA, DEFYNIK and DELON) practically worldwide.

SAGOLA®
an Elcometer company

Our History

1955
SAGOLA foundation as a subcontracting company

1960
SAGOLA begins manufacturing spray guns. Launches the Sagola ALM 401

1966
Expansion of SAGOLA facilities

1973
Due to its growth, SAGOLA builds the new facilities

1980
Sagola is a leader in Spain, Arab countries and Latin America

1990
Sagola launches its low-emission solvent products on the market. One of the top three manufacturers worldwide

1999
Sagola launches the 4200 G spray gun

2007
Sagola launches its first interchangeable HVLP air nozzle

2010
Sagola exports to more than 80 countries

2016
Investment in the latest technology and automation of its manufacturing processes. Sagola launches the 4600 Xtreme spray gun

2020
Sagola is part of the Elcometer Group

2022
Sagola launches the new innovation of the 4100 range spray gun.

2024
Launch of the Dynamic Flow Technology™ system.

2026
HEX System™, the innovative and revolutionary painting technology.

Product Index

1 Bodyshop • Refinish 13

page 14 Sprayguns

2 Industrial Bodyshop 63

page 64 Sprayguns
page 90 Pressure pot
page 98 Pneumatic Pumps

3 Application guides & accessories 107

page 108 Bodyshop sprayguns application guides
page 115 Sprayguns accessories

4 Airbrush and Touch-Up's 119

page 120 XTech Airbrushes
page 128 Complements

5 Crompressed air filtering 131

page 132 Introduction
page 136 5000 X Series filters
page 152 Pack 6000 X Air Heater
page 154 Serie 4000 Series filters
page 162 Serie Plus Series filters

6 Compressed air - Complements 169

page 170 Compressed air hoses
page 172 Quick couplings and connectors

7 Various Applications 177

page 178 Sealant guns
page 182 Pneumatic undercoating guns

8 Drying systems 187

page 188 Venturi drying guns

9 Personal protection 191

page 192 Anti-static coverall
page 193 Breathing masks

10 Accessories and complements 197

page 198 DPCTM cups.
page 200 Consumables
page 201 SagolaSPRAY™ - Virtual reality

Worldwide Support

ENGLAND, UK
Elcometer Limited
+44 (0)161 371 6000
sales@elcometer.com
www.elcometer.com

NETHERLANDS
Elcometer B.V.
+31 (0)30 259 1818
nl_info@elcometer.com
www.elcometer.nl

FRANCE
Elcometer Sarl
+33 (0)2 38 86 33 44
contact@elcometer.com
www.elcometer.fr

SPAIN
Sagola S.A.U.
+34 945 214 150
sagola@sagola.com
www.sagola.com

GERMANY
Elcometer Instruments GmbH
+49 (0) 7361 528 06 60
de_info@elcometer.com
www.elcometer.de

UNITED ARAB EMIRATES
EL Inspection & Blasting Equipment LLC
+971 4 295 0191
+971 4 280 3526
uae_sales@elcometer.com
www.elcometer.ae

After the incorporation of Sagola to the Elcometer group, its international network of own offices has been increased in a very significant way. Due to this new international network of offices worldwide, the acquisition of all the products manufactured by Sagola for the different business sectors is now much easier. However, Sagola has distributors in more than 80 countries.

JAPAN
Elcometer KK
+81 (0)3 6869 0770
jp_info@elcometer.com
www.elcometer.co.jp

UNITED STATES OF AMERICA
Elcometer Inc
WARREN, MI: +1 248 650 0500
Toll Free: 800 521 0635
inc@elcometer.com
www.elcometer.com

MEXICAN REPUBLIC
Sauritech SA de CV
+52 442 388 5099
ventas@sagolamexico.com.mx
www.sagolamexico.com.mx

REPUBLIC OF SINGAPORE
Elcometer (Asia) Pte Ltd
+65 6462 2822
asia@elcometer.com
www.elcometer.com

We are **here to help...**

sagola@sagola.com
www.sagola.com

FT - 344HQ
ISO 16890 ISO ePM10 50%
F1 DIN 53438-3
WÜRTH
SAGOLA

01

Bodyshop • Refinish

The maximum technological expression in finishing spray guns for bodyshop refinish.

The widest range of solutions for the new WATER and HS paints.

Homologations from the main automotive paint manufacturers.

Ease of application in the most demanding processes. Metallic, pearls, silvers,
high-gloss.

The widest range of answers for all types of professional, from the most demanding bodyshop production performance to the smallest workshop, including bodyshop coatings for industrial vehicles.

HEX SYSTEM™

DFT™ Dynamic Flow Technology

M2M™ Metal to Metal Technology

Sagola 4600 HEX

Engineered for perfect paint distribution, the Hex System™ eliminates mottling and uneven metallic particle alignment - especially when spraying silvers, golds, and other metallic colours. The result, a consistently smooth, professional-grade basecoat.

SAGOLA HEX 4600

Sagola's new Hex System™ technology

Sagola's new Hex System™ technology delivers ultra-precise control over droplet atomization ensuring each particle stays perfectly aligned, eliminating mottling and ensuring a flawless finish.

HEX™ SYSTEM

Sagola 4600 HEX

Hex System™

Sagola's patent-pending **Hex System™** features a uniquely designed hexagonal needle and nozzle that deliver three standout advantages:

Ultra-Uniform Fan Pattern

Engineered for perfect paint distribution, the Hex System™ eliminates mottling and uneven metallic particle alignment - especially when spraying silvers, golds, and other high-visibility finishes. The result, a consistently smooth, professional-grade basecoat.

Superior Atomization at Lower Pressure

Achieve a flat, high-quality finish without overloading your air system. The Hex System™ maintains droplet integrity and prevents fan pattern splitting - common issues when spraying at excessive pressure.

Built for precision. Trusted for performance.

When fitted to any Sagola 4600 DFT spray gun, Sagola's Hex needle and nozzles redefine spray control - one flawless finish at a time.

Custom box. Includes adapter coupling for PPS, Sagola DPC disposable cups.

HEX™ SYSTEM

Sagola already has industry-leading technologies

DFT™ Dynamic Flow Technology

M2M™ Metal to Metal Technology

Sagola 4600 HEX Part numbers

SAGOLA 4600 HEX standard

	SAGOLA 4600 BASE	SAGOLA 4600 HVLP	SAGOLA 4600 CLEAR	SAGOLA 4600 CLEAR PRO
1.20 HEX	10142470	10142473	10142472	10142471
1.20 XL HEX	10142478	10142481	10142480	10142479
1.30 HEX	10142474	10142477	10142476	10142475

Sagola 4600 HEX

Sagola 4600 HEX spare parts

SAGOLA is synonymous with quality and service. For this reason, SAGOLA provides a comprehensive spare parts and service guarantee, ensuring the proper maintenance of all its products, even those sold more than 10 years ago.
To ensure the best possible results and a high-quality finish, the spray gun must be thoroughly cleaned after each use and periodically checked for damaged or worn components. Any damaged or worn parts must be replaced.

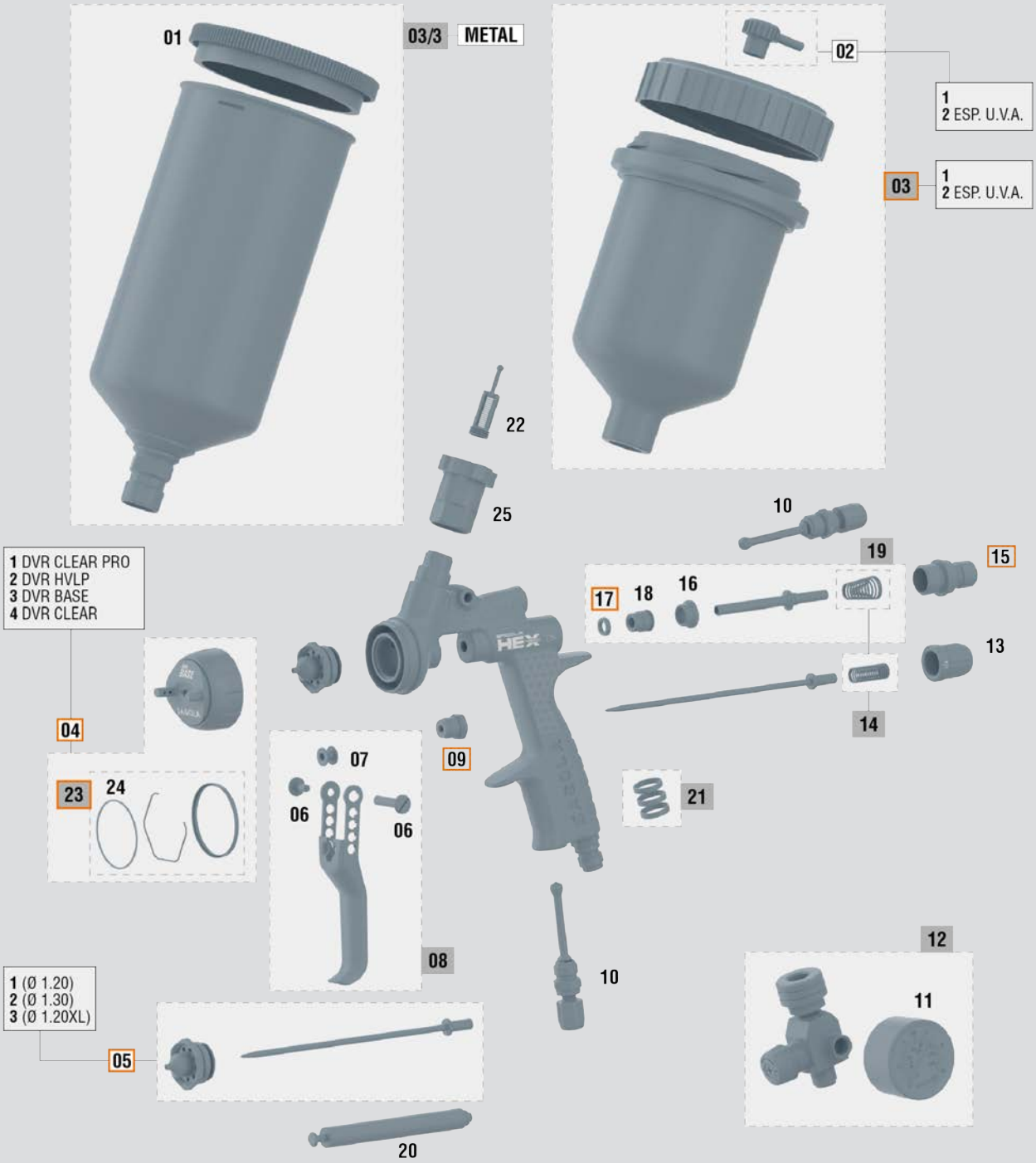

Latest updated version of the exploded view Sagola 4600 HEX

Sagola 4600 HEX

We call critical parts those that can stop the work of a spraygun: wear parts, gaskets, packings,... Sagola spray guns design offers **ONLY 6 CRITICAL PARTS (☐)**. Only 6 references in store to provide a 100% effective after-sales service.

SPARE PARTS — SAGOLA 4600 HEX

No.	Code	Description
01	57111513	Tank top cover gravity 1 L
02/1	55712157	Connection plug dripless
02/2	55712170	Connection plug dripless flat
03/1	**56418432**	**Kit gravity cup 0.65 L**
03/2	56418433	Cup + lid + filter 0.65 L gravity
03/3	56418505	Aluminium complete cup assy
04/1	**56418760**	**Kit air cap DVR/DFT CLEAR PRO**
04/2	**56418761**	**Kit air cap DVR/DFT HVLP**
04/3	**56418759**	**Kit air cap DVR/DFT BASE**
04/4	**56418762**	**Kit air cap DVR/DFT CLEAR**
05/1	**10011153**	**Kit nozzle + needle 1.20 HEX**
05/2	**10011154**	**Kit nozzle + needle 1.30 HEX**
05/3	**10011165**	**Kit nozzle + needle 1.20XL HEX**
06	56418631	Kit screw+gun trigger shaft
07	51910607	Bushing
08	56418673	Trigger kit line
09	**56411616**	**Packing nut complete**

SPARE PARTS — SAGOLA 4600 HEX

No.	Code	Description
10	56415258	Fan regulator
11	54550009	Gauge
12	56418020	RC1 air flow regulator with manometer
13	56415121	Regulator
14	56418633	Spring
15	**56411624**	**Product needle guide box**
16	54110012	Seating valve single axis
17	**56418441**	**Valve washer (6 units)**
18	57212205	Valve packing screw
19	56418634	Valve kit
20	50210214	Key assembly valve
21	56418635	Identification rings kit
22	56418438	Gravity filters kit
23	56418677	Gasket + spring nozzle kit
24	56418681	Gasket washer supplement kit (5 u)
25	55711607	Connection

This exploded view is not the material list of the spraygun

Clean the spraygun correctly. No metal tools. Only brushes. Lubricate the moving parts of the gun after each cleaning.

Cleaning kit Brush and sticks for optimum cleaning outside and inside the gun.

Code 40000086

Lubricant grease Natural grease. High consistency, even under extreme temperatures. Long lasting, it doesn't lose properties over the time. 100 ml. can.

Code 56418589

Altair Led

Ultra LED Lighting System for the Sagola 4600 HEX spray gun.

Visual control of coat coverage and spray pattern overlap.

Ref. 12010000 (see page 48)

Sagola 4600 DFT

Our best spray guns just got better!

Suitable for waterborne and solvent basecoats and clearcoats

SAGOLA 4600

DFT™
Dynamic Flow Technology

M2M™
Metal to Metal Technology

OUR SPRAYGUN IN ACTION

Sagola 4600 DFT

Everything you expect from an industry leading spray gun and more...

Efficient

Ultra-fine atomization and less overspray for an industry leading transfer efficiency.

Easy

Stable fan pattern, uniform from top to bottom, for precise colour matches, seamless transitions, and blends with easier overlapping.

Ergonomic

Designed to be so comfortable you forget you are holding it.

Even

A flawless finish with even particle distribution with minimal patching.

Effortless

It's so easy to use, you get a professional finish every time, with minimal effort.

Economic

Less air, less bounce back for the same flawless result with Dynamic Flow Technology™

Dynamic Flow Technology™

Dynamic Flow Technology™ harnesses the ambient air around the aircap allowing the Sagola 4600 spray gun to provide a flawless finish even at lower working pressures.

The Sagola 4600 provides a more even and uniform paint distribution, from top to bottom. This makes it ideal for difficult base colours such as metallics, silver, and pearls. It also minimises common paint defects like shadows, patch coats, and striping.

All of this is achieved while using less paint, less air, and less time, ultimately lowering your costs and boosting your profits.

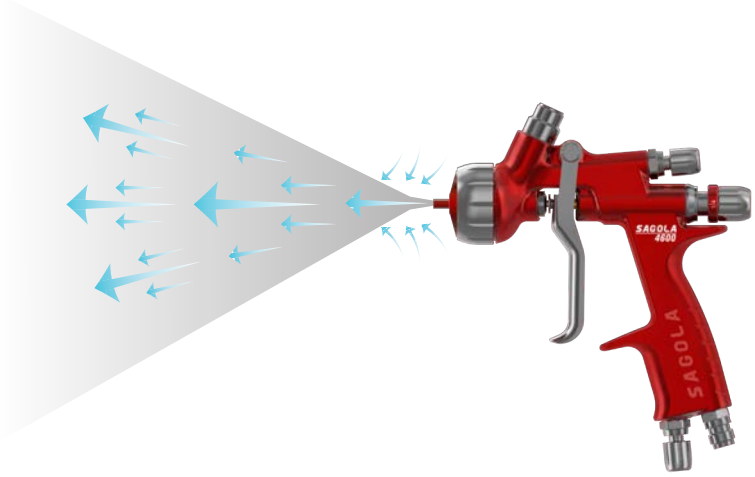

DFT™ gives you:

- Greater fan stability.
- Superior atomization.
- Uniform fan from top to bottom.
- Less bounce back, less overspray.
- A more precise application with easier overlapping.
- Less painting defects such as shadowing, patch coats and striping.
- An even paint distribution - ideal for difficult base colours such as metallics, silvers, pearls.

Metal to Metal™ Technology

Greater reliabilty, easier to clean, cheaper to maintain.

For over 70 years Sagola have been manufacturing industry leading spray equipment, often setting the benchmark for others to follow.

Our state-of the-art European production facilities uses aerospace grade engineering which allows us to create spray guns using metal to metal technology - which means our spray guns have fewer joints, o-rings and seals than any other spray gun on the market.

- Low maintenance.
- Fewer wearing parts.
- Low cost of ownership.
- Fast clean & colour change.
- No packings, joints or seals in fluid area.
- Greater reliabilty.

Sagola 4600 DFT

SAGOLA 4600

Air caps with DFT™ system

The latest technology that Sagola has designed for the latest generation air caps added to the DVR suction system, makes them the most efficient on the market.

DFT™ Dynamic Flow Technology

SAGOLA 4600 BASE

The Ultimate Basecoat Spray Gun for Colours, Metallics or Silvers

- Ideal for waterborne and solvent basecoats.
- Making it easier to colour match metallics, silvers & pearls.
- Maintains the uniformity of metallic colours even at low pressures.
- HVLP performance in an EPA Compliant gun.
- Standard or digital versions available.

SAGOLA 4600 HVLP

Designed for High Volume Low Pressure Applications

- Ideal for waterborne and solvent basecoats and specialist coatings.
- Large fan size to reduce application distance increasing transfer rates.
- Our fastest HVLP application speed.
- Maximum reduction of overspray.
- Standard or digital versions available.

SAGOLA 4600 CLEAR

Designed for clearcoats, single stage paints and OEM quality finishes

- For clearcoats high solids / ultra high solids and single stage products.
- Ideal for matching OEM quality finishes.
- Maximum application speed.
- Minimal overspray.
- Ultra fine atomization.
- Standard or digital versions available.

SAGOLA 4600 CLEAR PRO

Perfect for luxury mirror finishes, clearcoats and single stage paints

- High gloss in express drying clearcoats.
- Maximum application speed.
- Maximum control. Large fan size.
- Minimal overspray.
- Premium mirror finishes.
- Standard or digital versions available.

Sagola 4600 DFT

Technical data

	DIGITAL VERSION		STANDARD VERSION	
Weight with cup	665.6 g.	1.44 lbs	675 g.	1.49 lbs
Weight without cup	491.8 g.	1.08 lbs	464.8 g.	1.02 lbs
Air inlet connection	BSP 1/4” Male (high flow)		BSP 1/4” Male (high flow)	
Product Filter	80-mesh product filters		80-mesh product filters	
Recommended Working Pressure	2.0 bar	29 psi	2.0 bar	29 psi
Supplied Cup Capacity*	650 ml.	22 fl oz.	650 ml.	22 fl oz.
Average sound pressure level	max. 80 dB		max. 80 dB	
Battery type	Duracell/Varta CR 1/3N		-	
Materials in contact with the product	Anodised Aluminium, Polyoxymethylene, Stainless Steel			

*Sagola DPC™ Disposable Paint Cups are also available

No other spray gun on the market is able to spray as much paint per minute.

The combination of fluid nozzles and DVR aircaps with the Dynamic Flow Technology™ system is the result of years of experience and technological development. Application speed and covering power never seen before in the Refinish industry.

A before and after in the bodyworks of the whole world.

Air caps technical data

	DVR BASE	DVR HVLP	DVR CLEAR	DVR CLEAR PRO
Output Flow	191 - 227 g/min.	170 - 198 g/min.	185 - 219 g/min.	196 - 229 g/min.
	6.7 - 8 oz/min.	6 - 7 oz/min.	6.5 - 7.7 oz/min.	7 - 8 oz/min.
Air Consumption	280 L/min.	450 L/min.	295 L/min.	315 L/min.
	9.88 cfm	15.89 cfm	10.42 cfm	11.12 cfm
Fan Width	290 - 315 cm.	290 - 325 cm.	275 - 295 cm.	285 - 310 cm.
	11.4 - 12.4”	11.4 - 12.8”	10.8 - 11.6”	11.2 - 12.2”
Application Distance	18 - 20 cm.	15 - 18 cm.	18 - 20 cm.	18 - 20 cm.
	7 - 7.9”	6 - 7”	7 - 7.9”	7 - 7.9”
Air Inlet Pressure	1.8 - 2.0 bar	2.0 bar	2.2 bar	2.2 bar
	26.1 - 29 Psi	29 Psi	32 Psi	32 Psi

Sagola 4600 DFT

SAGOLA 4600

It's the smallest details that give you the best results...

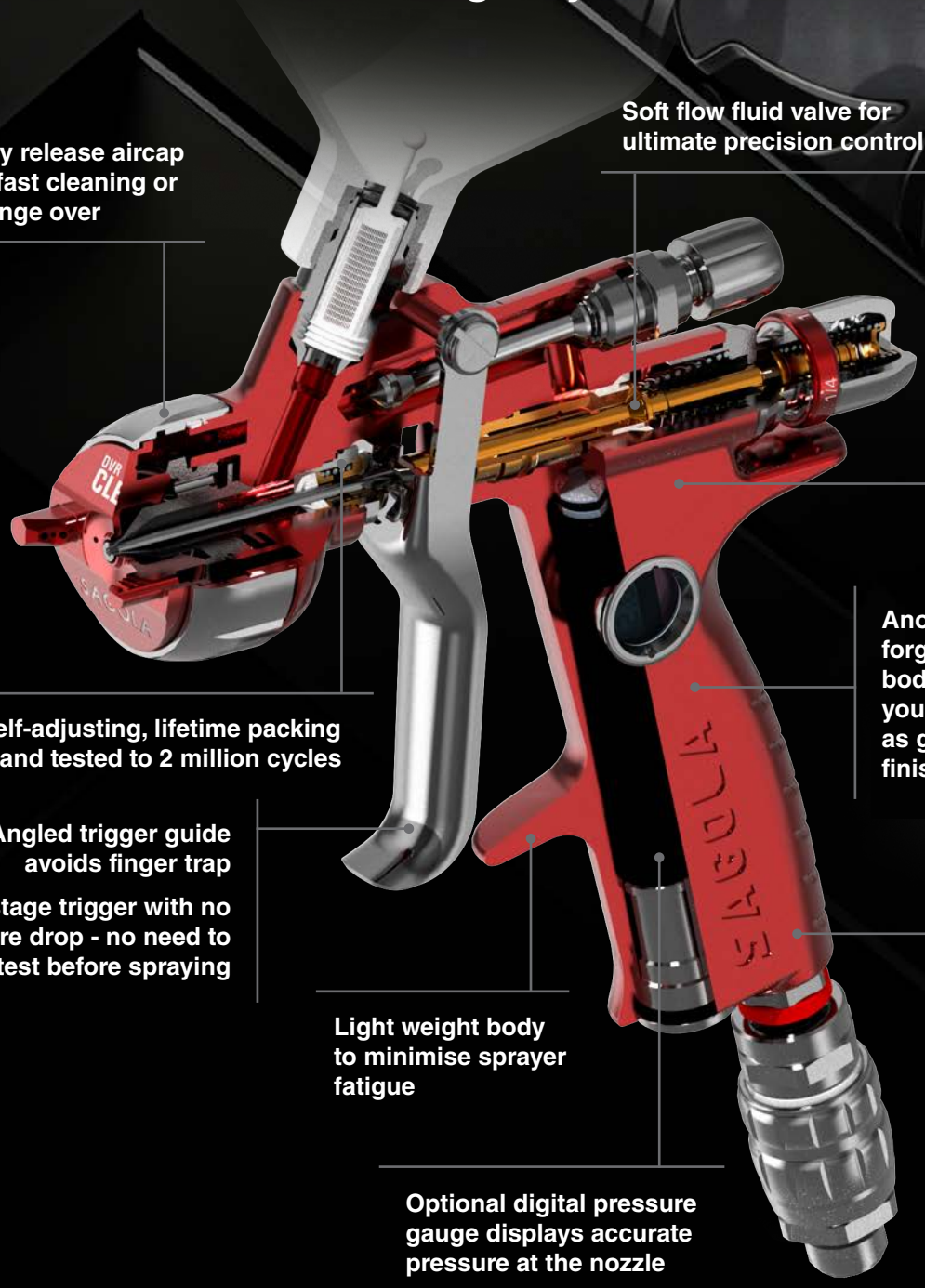

Easy release aircap for fast cleaning or change over

Soft flow fluid valve for ultimate precision control

Perfectly balanced for greater comfort and control

Anodised, no peel, forged aluminium body, ensuring your gun looks as good as your finishes

Self-adjusting, lifetime packing gland tested to 2 million cycles

Angled trigger guide avoids finger trap

2 stage trigger with no pressure drop - no need to test before spraying

Comfortable, slim handle ideal for small or large hands to spray for longer

Light weight body to minimise sprayer fatigue

Optional digital pressure gauge displays accurate pressure at the nozzle

Widely available, user replaceable batteries

DFT™ Dynamic Flow Technology

M2M™ Metal to Metal Technology

Air flow regulator with gauge

The RC1 pressure regulator is the perfect ally for the Non-digital version.
Hand tighten, no wrench needed.
Perfect closing.
No teflon need in gun's air inlet.

PRODUCT APPLICATION GUIDES

Sagola 4600 is approved by the leading paint manufacturers

Sagola 4600 DFT

Sagola 4600 DFT Part numbers

SAGOLA 4600 DFT STANDARD

	SAGOLA 4600 BASE	SAGOLA 4600 HVLP	SAGOLA 4600 CLEAR	SAGOLA 4600 CLEAR PRO
1.20 XS	10142461	-	-	-
1.20	10142401	10142404	10142403	10142402
1.20 XL	10142413	10142416	10142415	10142414
1.30	10142405	10142408	10142407	10142406
1.30 XL	10142417	10142420	10142419	10142418
1.40	10142409	10142412	10142411	10142410

SAGOLA 4600 DFT DIGITAL (BAR / PSI)

	SAGOLA 4600 BASE		SAGOLA 4600 HVLP		SAGOLA 4600 CLEAR		SAGOLA 4600 CLEAR PRO	
	BAR	PSI	BAR	PSI	BAR	PSI	BAR	PSI
1.20	10142421	10142441	10142424	10142444	10142423	10142443	10142422	10142442
1.20 XL	10142433	10142453	10142436	10142456	10142435	10142455	10142434	10142454
1.30	10142425	10142445	10142428	10142448	10142427	10142447	10142426	10142446
1.30 XL	10142437	10142457	10142440	10142460	10142439	10142459	10142438	10142458
1.40	10142429	10142449	10142432	10142452	10142431	10142451	10142430	10142450

SAGOLA 4600 SPRAY GUN CASE

2 x Sagola 4600 DFT standard	10141760
Sagola 4600 DFT standard + Sagola 4600 DFT Digital	10141761
2 x Sagola 4600 DFT digital	10141762
2 x Sagola 4600 HEX	10141766
Sagola 4600 HEX + Sagola 4600 DFT Digital	10141767

AIR CAP SPARES

DVR BASE	56418759
DVR HVLP	56418761
DVR CLEAR	56418762
DVR CLEAR PRO	56418760

Ordering information

The Sagola 4600 is available to purchase as a complete kit with the aircap, needle and nozzle specified, supplied and fitted.

Each box contains:

- Sagola 4600 gun, aircap, needle and nozzle
- 650 ml (22 fl oz) reusable paint cup
- Universal maintenance wrench
- Air valve wrench
- Cleaning brush
- Colour code rings

Sagola 4600 DFT

Sagola 4600 DFT spare parts

SAGOLA is synonymous with quality and service. For this reason, SAGOLA provides a comprehensive spare parts and service guarantee, ensuring the proper maintenance of all its products, even those sold more than 10 years ago.
To ensure the best possible results and a high-quality finish, the spray gun must be thoroughly cleaned after each use and periodically checked for damaged or worn components. Any damaged or worn parts must be replaced.

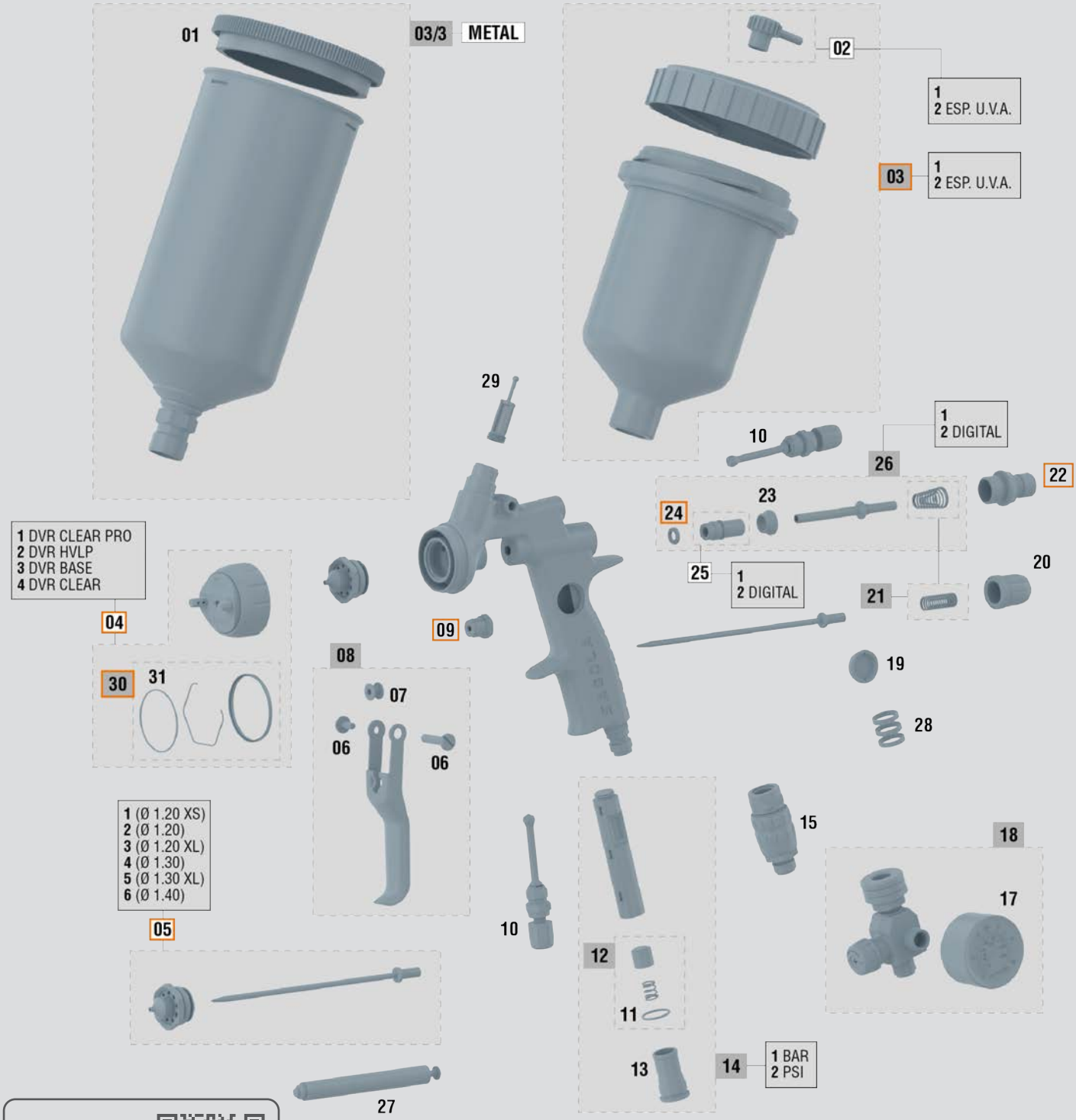

Latest updated version of the exploded view Sagola 4600 DFT

Sagola 4600 DFT

We call critical parts those that can stop the work of a spraygun: wear parts, gaskets, packings,... Sagola spray guns design offers **ONLY 6 CRITICAL PARTS ( )**. Only 6 references in store to provide a 100% effective after-sales service.

SPARE PARTS — SAGOLA 4600 DFT

No.	Code	Description
01	57111513	Gravity tank top cover 1.00 L (plastic)
02/1	55712157	Connection plug dripless
02/2	55712170	Connection plug dripless flat (U.V.A.)
03/1	**56418432**	**Gravity cup 0.65 L**
03/2	56418433	Gravity cup 0.65 L (U.V.A.)
03/3	56418505	Aluminium Gravity cup 1.00 L
04/1	**56418760**	**Aircap DVR Clear Pro**
04/2	**56418761**	**Aircap DVR HVLP**
04/3	**56418759**	**Aircap DVR Base**
04/4	**56418762**	**Aircap DVR Clear**
05/1	**10011164**	**Kit nozzle + needle 1.20 XS Serie 46**
05/2	**10011137**	**Kit nozzle + needle 1.20 Serie 46**
05/3	**10011145**	**Kit nozzle + needle 1.20 XL Serie 46**
05/4	**10011138**	**Kit nozzle + needle 1.30 Serie 46**
05/5	**10011139**	**Kit nozzle + needle 1.30 XL Serie 46**
05/6	**10011140**	**Kit nozzle + needle 1.40 Serie 46**
06	56418631	Kit screw + trigger shaft
07	51910607	Bushing
08	56418632	Trigger kit
09	**56411616**	**Complete packing nut Kit**
10	56415258	Fan Regulator
11	54250985	O-ring 17 x 1
12	56418440	Battery replacement Kit (digital version)

SPARE PARTS — SAGOLA 4600 DFT

No.	Code	Description
13	55710004	Battery door connection (digital version)
14/1	56418442	Digital gauge Kit (Scale BAR)
14/2	56418559	Digital gauge Kit (Scale PSI)
15	56418012	Air flow Regulator 1/4” x19 M-F
17	54550009	Gauge 10 1/8” Centered position
18	56418020	RC1 Air flow regulator with gauge
19	56410065	Gauge viewfinder digital reading
20	56415121	Product Regulator wheel
21	56418633	Spring Kit
22	**56411624**	**Product needle guide box**
23	54110012	Air valve seating
24	**56418441**	**Air valve washer (6 units)**
25/1	57212205	Packing screw
25/2	57212223	Packing screw (digital version)
26/1	56418634	Air valve Kit
26/2	56418636	Air valve Kit (digital version)
27	50210214	Air valve assembly key
28	56418635	Identification rings kit
29	56418438	Product filters (10 units)
30	56418677	Gasket nozzle Kit
31	56418681	Gasket washer (5 units)

This exploded view is not the material list of the spraygun

Clean the spraygun correctly. No metal tools. Only brushes. Lubricate the moving parts of the gun after each cleaning.

Cleaning kit Brush and sticks for optimum cleaning outside and inside the gun.

Code 40000086

Lubricant grease Natural grease. High consistency, even under extreme temperatures. Long lasting, it doesn’t lose properties over the time. 100 ml. can.

Code 56418589

Altair Led

Ultra LED Lighting System for the Sagola 4600 DFT spray gun.

Visual control of coat coverage and spray pattern overlap.

Ref. 12010000 (see page 48)

Sagola 3600 XPT

DFT™
Dynamic Flow Technology

The Sagola 3600 XPT introduces a new generation of air caps, specifically designed to deliver superior performance.

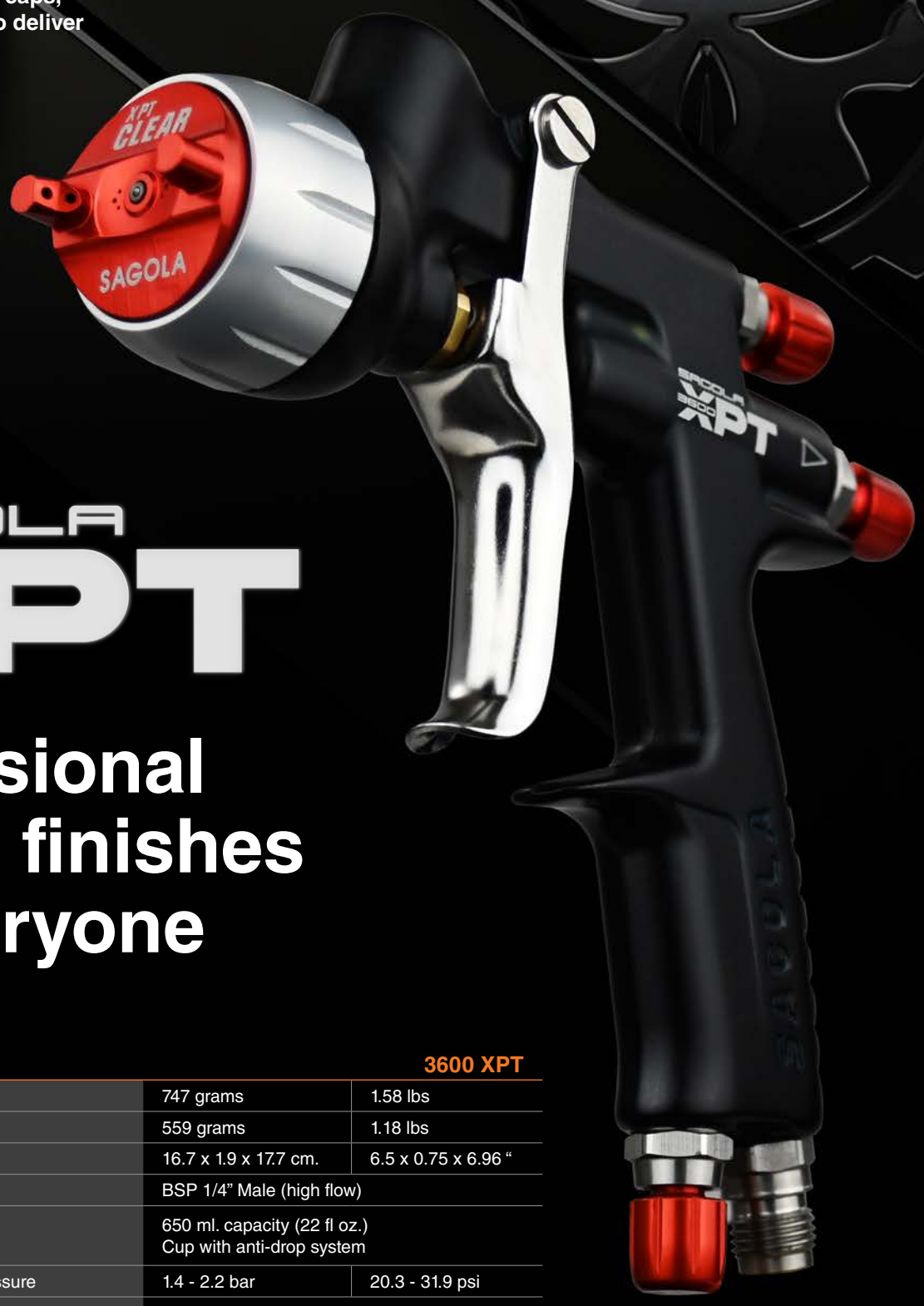

SAGOLA 3600 XPT

Professional quality finishes for everyone

TECHNICAL DATA		3600 XPT
Weight with cup	747 grams	1.58 lbs
Weight without cup	559 grams	1.18 lbs
Dimensions without cup	16.7 x 1.9 x 17.7 cm.	6.5 x 0.75 x 6.96 “
Air inlet connection	BSP 1/4” Male (high flow)	
Cup	650 ml. capacity (22 fl oz.) Cup with anti-drop system	
Recommended working pressure	1.4 - 2.2 bar	20.3 - 31.9 psi
Average sound pressure level	80 dB	
Materials in contact with the product	Anodised aluminium, stainless steel and polyoxymethylene	

Sagola 3600 XPT

Key new features

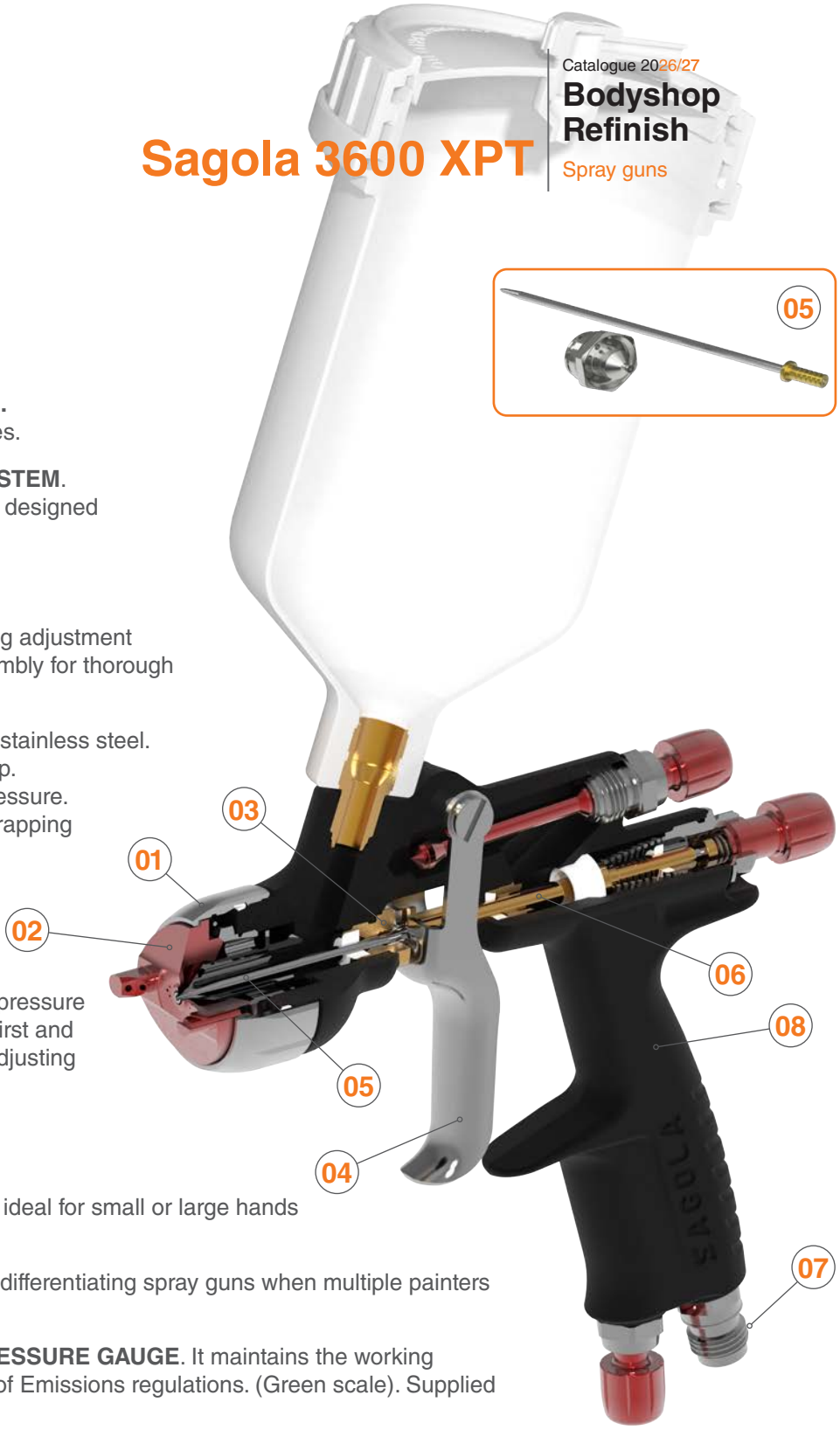

01 QUICK-RELEASE AIR CAP RING.
For faster cleaning and air cap changes.

02 AIR CAPS WITH NEW DFT™ SYSTEM.
New generation of air caps specifically designed for superior performance.

03 AUTOMATIC ONE-PIECE PRODUCT PACKING GLAND.
Unique on the market. Prevents packing adjustment and damage, and allows easy disassembly for thorough cleaning of the product section.

04 ERGONOMIC TRIGGER. Made of stainless steel.
Two-stage trigger with no pressure drop.
No need to waste paint to adjust air pressure.
Angled trigger design prevents finger trapping and reduces fatigue.

05 NOZZLES AND NEEDLES.
Made of stainless steel.

06 "SOFT FLOW" AIR VALVE.
Smooth trigger action even at high air pressure levels. No pressure drop between the first and second trigger stages. Save paint by adjusting air pressure with the trigger partially pressed (first stage).

07 AIR INLET 1/4".

08 SLIM, COMFORTABLE HANDLE, ideal for small or large hands and long spraying sessions.

09 COLOUR IDENTIFIER. Perfect for differentiating spray guns when multiple painters are working. (COLOUR CODE)

10 AIR FLOW REGULATOR with PRESSURE GAUGE. It maintains the working pressure according to the parameters of Emissions regulations. (Green scale). Supplied in all versions. Code 40000335

Approved for use by leading paint brands. Visit www.sagola.com to download our Paint Application Guides.

Sagola 3600 XPT

DYNAMIC FLOW TECHNOLOGY™ system

Dynamic Flow Technology™ makes more efficient use of ambient air drawn into the air cap, delivering an outstanding finish even at lower working pressures.

- Greater fan stability.
- Superior atomization.
- Uniform fan from top to bottom.
- Less bounce back, less overspray.
- A more precise application with easier overlapping.
- Less painting defects such as shadowing, patch coats and striping.
- An even paint distribution - ideal for difficult base colours such as metallics, silvers, pearls.

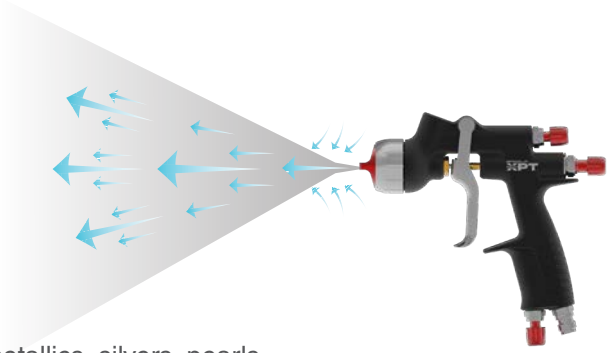

Engineered for professionals

Introducing the Sagola 3600 XPT Topcoat Spray Gun engineered for professionals who demand premium top coat results without a premium price.

Ergonomic

This versatile spray gun combines proven ergonomic design with advanced features, making it the ideal solution for achieving flawless, factory-quality finishes on both basecoats and clearcoats.

Advanced XPT aircap technology

The Sagola 3600 XPT introduces a new generation of aircaps specifically engineered for superior performance. The dedicated XPT Clear, XPT Base, and XPT HVLP caps are designed to optimize atomization and fan pattern for their respective materials, ensuring every coat is applied with ultimate precision.

Balanced performance

The Sagola 3600 XPT is a true workhorse, offering a perfect balance of the renowned durability of the Sagola 3300 and the high-end finishing capabilities of the Sagola 4600 DFT, making it a professional's go-to choice for consistent top coat quality.

RC2 Air Flow Regulator with Pressure Gauge

Integrated for precise control, the RC2 air flow regulator provides immediate and accurate feedback, allowing the painter to continuously adjust the perfect pressure for optimal atomisation and a uniform finish. **Supplied as standard.**

Sagola 3600 XPT

XPT aircaps technical data / Versions

XPT BASE Air cap. Sagola EPA high transfer system.
High level of atomisation.

Recommended application	Nozzle	Product output flow	Fan size	Application distance	Code 3600 XPT
WATERBORNE BASECOAT	1.20	169 g/min. (6 oz/min.)	305 mm. (12”)	18 - 20 cm. (7 - 7.9”)	10142501
SOLVENT BASECOAT					
WATERBORNE BASECOAT	1.30	179 g/min. (6.3 oz/min.)	315 mm. (12.4”)		10142502
SOLVENT BASECOAT					
SOLVENT BASECOAT	1.40	179 g/min. (6.3 oz/min.)	315 mm. (12.4”)		10142503

Air consumption at 2 bar (29 psi): 285 L/min. (10.1 cfm)

Recommended pressure: 1.8 - 2.2 bar (26.1 - 31.9 psi)

XPT HVLP Air cap. Versatility taken to the highest level. Suitable for basecoat, clearcoat and single-stage applications. High level of atomisation. Sagola EPA high-transfer system.

Recommended application	Nozzle	Product output flow	Fan size	Application distance	Code 3600 XPT
WATERBORNE BASECOAT	1.20	145 g/min. (5.1 oz/min.)	245 mm. (9.6”)	15 - 18 cm. (6 - 7”)	10142504
SOLVENT BASECOAT					
WATERBORNE BASECOAT	1.30	179 g/min. (6.3 oz/min.)	250 mm. (9.8”)		10142505
SOLVENT BASECOAT					
SOLVENT BASECOAT	1.40	161 g/min. (5.75 oz/min.)	255 mm. (10”)		10142506

Air consumption at 2 bar (29 psi): 360 L/min. (12.85 cfm)

Recommended pressure: 2.0 bar (29 psi)

XPT CLEAR Air cap. Maximum versatility. Suitable for basecoat, clearcoat and single-stage applications. High atomisation.
Sagola EPA high-transfer system.

Recommended application	Nozzle	Product output flow	Fan size	Application distance	Code 3600 XPT
HS/UHS CLEARCOATS	1.20	169 g/min. (6 oz/min.)	295 mm. (11,6”)	18 - 20 cm. (7 - 7,9”)	10142507
HS/UHS CLEAR	1.30	172 g/min. (6,1 oz/min.)	300 mm. (11,8”)		10142508
SINGLE STAGE					
WET/WET					
HS/UHS CLEAR	1.40	179 g/min. (6,3 oz/min.)	305 mm. (12”)		10142509
SINGLE STAGE					

Air consumption at 2 bar (29 psi): 285 L/min. (10.1 cfm)

Recommended pressure: 2.2 bar (32 psi)

Sagola 3600 XPT

Sagola 3600 XPT spare parts

SAGOLA is synonymous with quality and service. For this reason, SAGOLA provides a comprehensive spare parts and service guarantee, ensuring the proper maintenance of all its products, even those sold more than 10 years ago.
To ensure the best possible results and a high-quality finish, the spray gun must be thoroughly cleaned after each use and periodically checked for damaged or worn components. Any damaged or worn parts must be replaced.

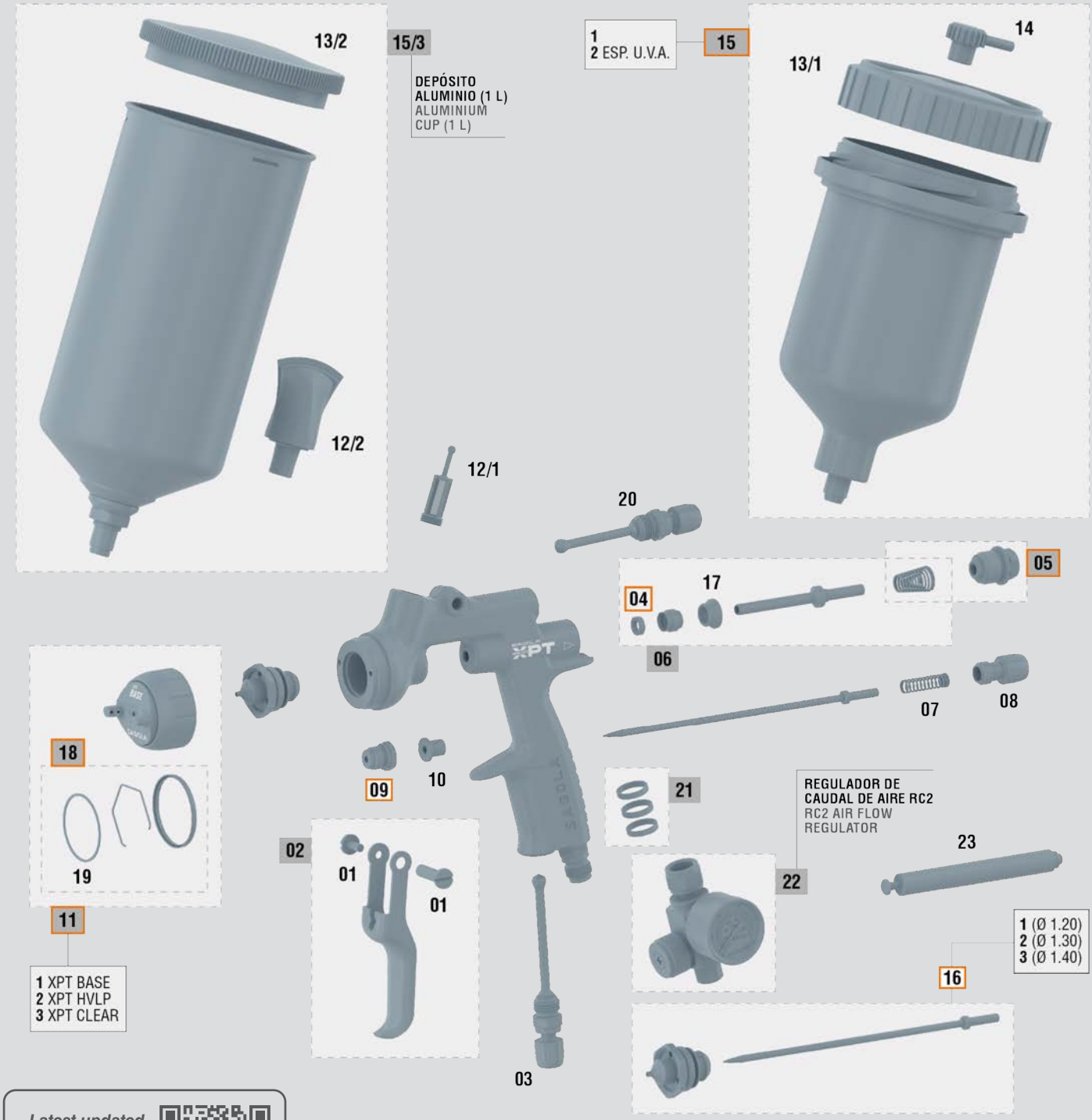

Latest updated version of the exploded view Sagola 3600 XPT

Sagola 3600 XPT

We call critical parts those that can stop the work of a spraygun: wear parts, gaskets, packings,... Sagola spray guns design offers **ONLY 6 CRITICAL PARTS (☐)**. Only 6 references in store to provide a 100% effective after-sales service.

SPARE PARTS — SAGOLA 3600 XPT

No.	Code	Description
01	56418429	Screw + gun trigger sahft Kit
02	56418637	Trigger kit
03	56415265	Fan regulator
04	**56418494**	**Valve washer Kit (6 units)**
05	**56418701**	**Product needle + spring Kit**
06	56418669	Valve Kit
07	56410072	Spring
08	57810355	Product regulator
09	**57212211**	**Packing nut complete**
10	51910608	Trigger needle guide bushing
11/1	**56418774**	**XPT BASE 3600 air cap**
11/2	**56418775**	**XPT HVLP 3600 air cap**
11/3	**56418776**	**XPT CLEAR 3600 air cap**
12/1	56418438	Gravity filters Kit
12/2	56418003	Product filters kit (10 u.)

SPARE PARTS — SAGOLA 3600 XPT

No.	Code	Description
13/1	57111508	0.65 L Gravity cup lid
13/2	57111513	1.00 L Tank top cover
14	55712157	Connection plug dripless
15/1	**56418085**	**0.65 L Gravity cup kit**
15/2	**56418433**	**Cup + lid + filter 0.65 L**
15/3	56418082	Aluminium complete cup
16/1	**10010163**	**Kit nozzle + needle 1.20 serie 36**
16/2	**10010164**	**Kit nozzle + needle 1.30 serie 36**
16/3	**10010165**	**Kit nozzle + needle 1.40 serie 36**
17	54110012	Seating valve
18	**56418679**	**Gasket + spring nozzle kit**
19	**56418682**	**Gasket washer supplement kit (5 u)**
20	56415268	Fan regulator
21	56418635	Identification rings kit
22	40000335	RC2 air flow regulator
23	50210214	Key assembly valve

This exploded view is not the material list of the spraygun

Clean the spraygun correctly. No metal tools. Only brushes. Lubricate the moving parts of the gun after each cleaning.

Cleaning kit Brush and sticks for optimum cleaning outside and inside the gun.

Code 40000086

Lubricant grease Natural grease. High consistency, even under extreme temperatures. Long lasting, it doesn't lose properties over the time. 100 ml. can.

Code 56418589

Altair Led

Ultra LED Lighting System for the Sagola 3600 XPT spray gun.

Visual control of coat coverage and spray pattern overlap.

Ref. 12013000 (see page 48)

Sagola 3300 GTO

From a basecoat, to a filler or gun putty. There's nothing better than the 3300 GTO spraygun. Wide variety of aircaps and fluid nozzles from 1.0 mm. up to 2.8 mm.

Finishes: 1.0 - 1.4 mm.
Primers: 1.6 - 1.8 mm.
Gun putties: 2.0 - 2.8 mm.

Unreachable technologies for many..., incorporated in our mid-range of sprayguns.

Versatility

HVLP and EPA high transfer Aircaps made of duralumin. Forged aluminum body with 'soft touch' satin finish. No joints or plastic inserts in the product area. One-piece self-adjusting packing gland. Ergonomic trigger made of stainless steel.

TECHNICAL DATA	SAGOLA 3300 GTO	
Weight with cup	662.4 grams	1.46 lbs
Weight without cup	474.8 grams	1.05 lbs
Dimensions without cup	18.2 x 1.9 x 17.8 cm.	7.16 x 0.75 x 7.05 "
Air inlet connection	BSP 1/4" Male	
Cup	650 ml. capacity (22 fl oz.) Cup with anti-drop system	
Recommended working pressure	2 bar	29 psi
Average sound pressure level	80 dB	
Materials in contact with the product	Anodised aluminium, stainless steel, PTFE, POM and nylon	

M2M™
Metal to Metal Technology

Sagola 3300 GTO

Key new features

01 SUPER LIGHT. -METAL TO METAL- TECHNOLOGY.
No sealing joints between components.

02 High strength FORGED ALUMINUM BODY.
REGISTER DC 924667-0004 DESIGN REGISTER.

03 NEW ALUMINUM AIRCAPS.
GTO TECH / GTO HVLP / 3300 EPA / 3300 EVO
Ultra-fine atomization and larger fans. Designed for the best response at any pressure. With mechanized aerodynamic caps which eliminate turbulence and reverse painting.

04 One single piece AUTOMATIC PAINT PACKING GLAND.
Unique in the market. It avoids manipulation and breakage of the glands and makes it easier to remove for thorough cleaning of the paint area.

05 ERGONOMIC TRIGGER.
Made of stainless steel.
It reduces fatigue.

06 NOZZLE AND NEEDLE.
Made of stainless steel.

07 "SOFT FLOW" AIR VALVE.
Smooth trigger even at high air pressure levels.
No pressure drops between the 1st and 2nd stage of the trigger. Save paint by regulating air pressure with the trigger partially pulled (1st stage).

08 SINGLE SHAFT SYSTEM.
Directly continuing Xtreme model series with a simplified design, synchronized performance in any kind of situation, fewer parts, and maintenance reduction.

09 AIR INLET 1/4".

10 AIR FLOW REGULATOR with PRESSURE GAUGE. It maintains the working pressure according to the parameters of Emissions regulations. (Green scale). Code 40000335

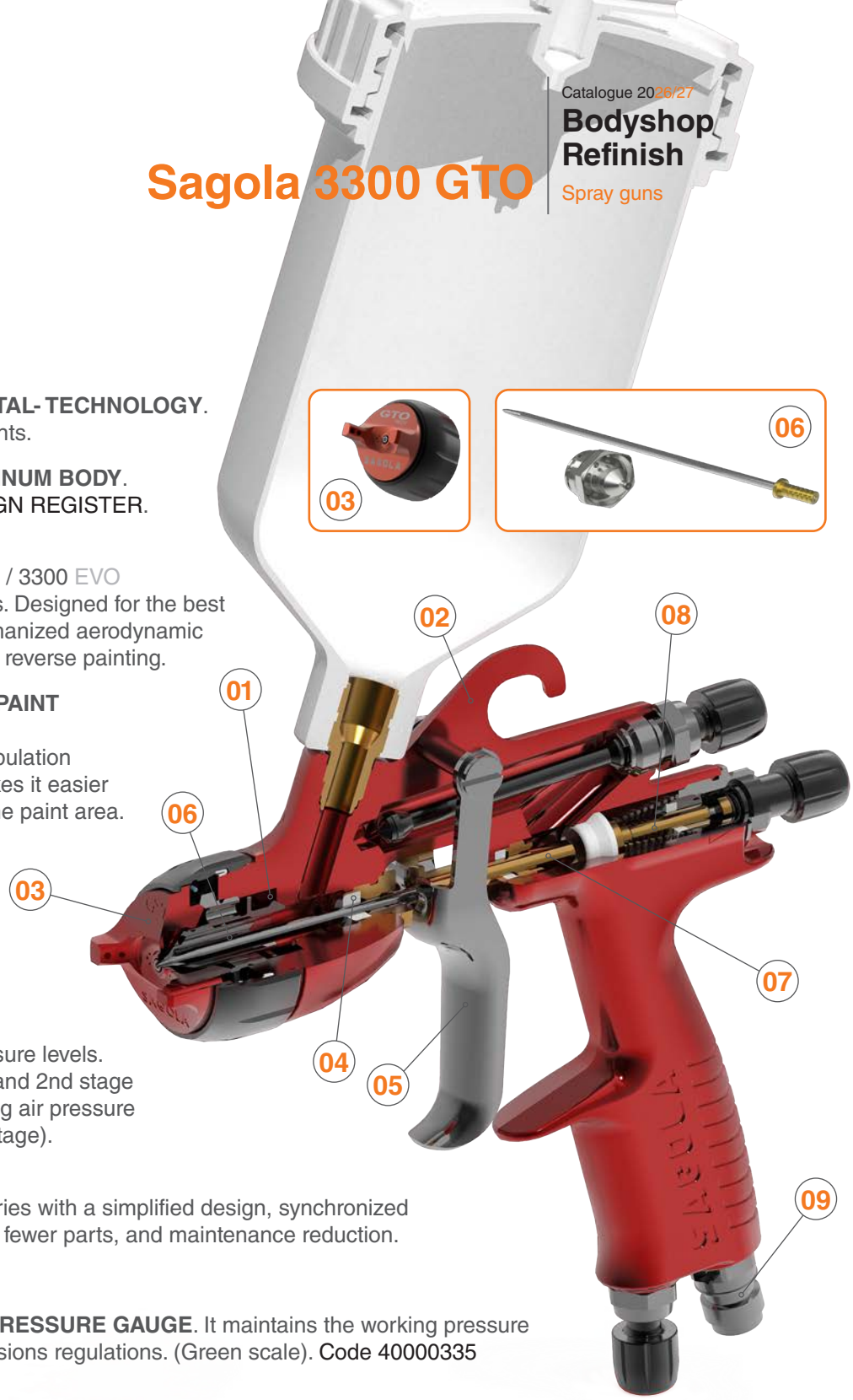

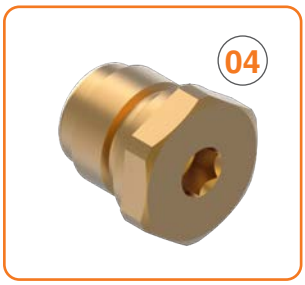

Approved for use by leading paint brands. Visit www.sagola.com to download our Paint Application Guides.

Sagola 3300 GTO

GTO aircaps technical data / Versions

GTO TECH Air cap. Versatility brought to the maximum expression. Suitable for both colour and clearcoat and single stage products. High atomization level. Sagola EPA high transfer system.

Recommended application	Nozzle	Product output flow	Fan size	Application distance	Code 3300 GTO
WATERBORNE BASECOAT	1.30	169 g/min. (6 oz/min.)	305 mm. (12”)	18 - 20 cm. (7 - 7.9”)	10141567
CLEARCOAT QUICK DRYING					
SOLVENT BASECOAT	1.40	179 g/min. (6.3 oz/min.)	315 mm. (12.4”)		10141568
UHS CLEARCOAT					
SINGLE STAGE					

Air consumption at 2 bar (29 psi): 285 L/min. (10.06 cfm)

Recommended pressure: 1.8 - 2.2 bar (26.1 - 31.9 psi)

COLOUR
CLEAR

GTO HVLP Air cap. Sagola HVLP System. Low aircap pressure to paint closer to the part and increase the transfer rate. Perfect colour uniformity, especially in metallics.

Recommended application	Nozzle	Product output flow	Fan size	Application distance	Code 3300 GTO
WATERBORNE BASECOAT	1.30	145 g/min. (5.1 oz/min.)	245 mm. (9.6”)	12 - 15 cm. (4.72 - 5.90”)	10141570
SOLVENT BASECOAT	1.40	161 g/min. (5.7 oz/min.)	250 mm. (9.8”)		10141555
SANDING PRIMERS	1.60	172 g/min. (6 oz/min.)	260 mm. (10.2”)		10141556
	1.80	193 g/min. (6.8 oz/min.)	295 mm. (11.6”)		10141557

Air consumption at 2 bar (29 psi): 360 L/min. (12.71 cfm)

Recommended pressure: 1.8 - 2.0 bar (26.1 - 29 psi)

COLOUR
PRIMERS

GTO EPA Air cap. Sagola EPA high transfer system. Specially designed to obtain a smooth and uniform finish. Saving time and consumables in the sanding process.

The reduction of spray mist (overspray), makes it suitable for use outside the booth in preparation areas; also achieving a significant reduction in the consumption of primer and in the emission of toxic components for the environment.

Recommended application	Nozzle	Product output flow	Fan size	Application distance	Code 3300 GTO
SANDING PRIMERS	1.60	156 g/min. (5.5 oz/min.)	225 mm. (8.9”)	18 - 20 cm. (7 - 7.9”)	10141563
	1.80	184 g/min. (6.5 oz/min.)	245 mm. (9.6”)		10141564

Air consumption at 2 bar (29 psi): 250 L/min. (8.8 cfm)

Recommended pressure: 1.8 - 2.0 bar (26.1 - 29 psi)

PRIMERS

Sagola 3300 GTO

GTO aircaps technical data / Versions

GTO EVO Air cap. Sagola EPA high transfer system. Maximum atomization quality to achieve a fine and stretched finish. large fan size.

Recommended application	Nozzle	Product output flow	Fan size	Application distance	Code 3300 GTO
PRIMERS WET ON WET	1.30	172 g/min. (6 oz/min.)	260 mm. (10.2”)	18 - 20 cm. (7 - 7.9”)	10141559
	1.40	179 g/min. (6.3 oz/min.)	280 mm. (11”)		10141560

Air consumption at 2 bar (29 psi): 255 L/min. (9.01 cfm)

Recommended pressure: 1.8 - 2.0 bar (26.1 - 29 psi)

PRIMERS

GTO 64S/62S Air caps. Maximum product output flow and atomization power for the application of putties on large surfaces. Smooth and uniform finish. Saving time and consumables in the sanding process.

Recommended application	Nozzle	Product output flow	Fan size	Application distance	Code 3300 GTO
GUN FILLERS	2.20 **64S**	300 g/min. (10.6 oz/min.)	300 mm. (11.8”)	18 - 20 cm. (7 - 7.9”)	10141572
	2.80 **62S**	397 g/min. (14 oz/min.)	250 mm. (9.8”)		10141574

Air consumption at 2 bar (29 psi) 64S: 310 L/min. (10.9 cfm)
Air consumption at 2 bar (29 psi) 62S: 270 L/min. (9.5 cfm)

Recommended pressure: 2.0 - 2.5 bar (29 - 36.2 psi)

PRIMERS

The Sagola 3300 GTO is a professional-quality spray gun designed to deliver exceptional performance in finishing applications, including basecoats and clearcoats.

PRECISION AND CONTROL

With redesigned regulators for air flow, paint flow, and fan control, the gun provides painters with a high degree of precision to achieve a flawless finish.

DURABLE AND LIGHTWEIGHT

It features a forged and anodized aluminium body, making it both lightweight for user comfort during long painting sessions and robust for extended durability.

EASY MAINTENANCE

The gun is designed for easy cleaning and minimal maintenance, thanks to its “metal-to-metal” construction with no gaskets, seals, or threads in the product area, which also prevents material contamination.

Sagola 3300 GTO

Sagola 3300 GTO spare parts

SAGOLA is synonymous with quality and service. For this reason, SAGOLA provides a comprehensive spare parts and service guarantee, ensuring the proper maintenance of all its products, even those sold more than 10 years ago.
To ensure the best possible results and a high-quality finish, the spray gun must be thoroughly cleaned after each use and periodically checked for damaged or worn components. Any damaged or worn parts must be replaced.

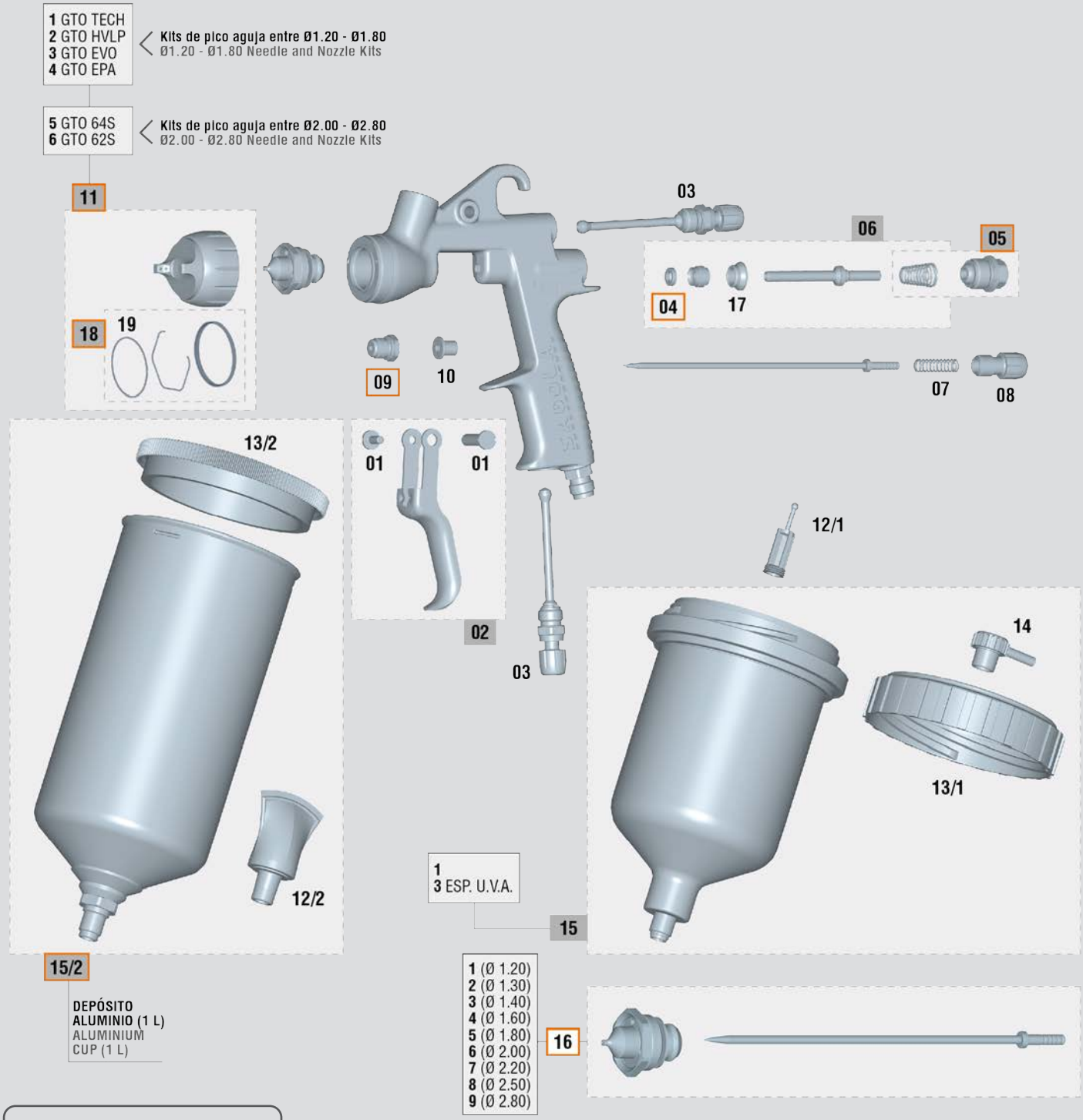

Latest updated version of the exploded view Sagola 3300 GTO

Sagola 3300 GTO

We call critical parts those that can stop the work of a spraygun: wear parts, gaskets, packings,... Sagola spray guns design offers **ONLY 6 CRITICAL PARTS ( )**. Only 6 references in store to provide a 100% effective after-sales service.

SPARE PARTS — Sagola 3300 GTO

No.	Code	Description
01	56418429	Kit screw + trigger shaft (short)
02	56418637	Trigger Kit
03	56415254	Air flow / fan regulator
04	**56418494**	**Air valve washer (6 units)**
05	56418701	Product needle guide box + spring
06	56418669	Air valve Kit
07	56410072	Spring + stop
08	57810342	Product regulator wheel (black)
09	**57212211**	**Complete packing nut Kit**
10	51910608	Bushing
11/1	**56418551**	**Aircap GTO TECH**
11/2	**56418552**	**Aircap GTO HVLP**
11/3	**56418558**	**Aircap GTO EVO**
11/4	**56418645**	**Aircap 3300 EPA**
11/5	**56418646**	**Aircap 64S**
11/6	**56418647**	**Aircap 62S**
12/1	56418438	Product filter (10 units)
12/2	56418003	Product filter 1L metallic cup (10 units)

SPARE PARTS — Sagola 3300 GTO

No.	Code	Description
13/1	57111508	Gravity cup top cover 0.65 L
13/2	57111513	Gravity cup top cover 1.00 L (plastic)
14	55712157	Connection plug dripless
15/1	**56418085**	**Gravity cup 0.65 L**
15/2	56418082	Aluminium cup 1 L
15/3	56418433	Gravity cup 0.65 L (U.V.A.)
16/1	**10011180**	**Kit nozzle + needle 1.20 Serie 3300 Pro**
16/2	**10011191**	**Kit nozzle + needle 1.30 Serie 3300 Pro**
16/3	**10011181**	**Kit nozzle + needle 1.40 Serie 3300 Pro**
16/4	**10011182**	**Kit nozzle + needle 1.60 Serie 3300 Pro**
16/5	**10011183**	**Kit nozzle + needle 1.80 Serie 3300 Pro**
16/6	**10011188**	**Kit nozzle + needle 2.00 Serie 3300 Pro**
16/7	**10011192**	**Kit nozzle + needle 2.20 Serie 3300 Pro**
16/8	**10011190**	**Kit nozzle + needle 2.80 Serie 3300 Pro**
17	54110012	Air valve seating
18	56418679	Gasket nozzle Kit
19	56418682	Gasket washer (5 units)

This exploded view is not the material list of the spraygun

Clean the spraygun correctly. No metal tools. Only brushes. Lubricate the moving parts of the gun after each cleaning.

Cleaning kit Brush and sticks for optimum cleaning outside and inside the gun.

Code 40000086

Lubricant grease Natural grease. High consistency, even under extreme temperatures. Long lasting, it doesn't lose properties over the time. 100 ml. can.

Code 56418589

Altair Led

Ultra LED Lighting System for the Sagola 3300 GTO spray gun.

Visual control of coat coverage and spray pattern overlap.

Ref. 12011000 (see page 48)

Sagola 3400 Compact

Spot Repair

All our hallmarks in just 365 grams: metal-to-metal technology, aircaps made of duralumin, forged and anodized body...

Ideal for parts painting

The little beast

SAGOLA 3400 COMPACT

The best tool for quick everyday repairs. Adjusted fan size to save product on painting small parts.

Fans of 30 cm. with an air consumption of 190 L/min. Suitable to work with 2 HP compressors.

TECHNICAL DATA		3400 COMPACT
Weight with cup 125 ml.	445.5 grams	0.98 lbs
Weight with cup 650 ml.	544 grams	1.2 lbs
Weight without cup	365 grams	0.80 lbs
Dimensions without cup	15.6 x 1.8 x 15.8 cm.	6.16 x 0.71 x 6.25 “
Air inlet connection	BSP 1/4” Male	
Cup	125 ml. (4.23 fl oz.) or 650 ml. (22 fl oz.) capacity Cup with anti-drip system	
Product filter	Includes 80-mesh product filters	
Recommended working pressure	1.4 - 2.2 bar	20.3 - 31.9 psi
Average sound pressure level	80 dB	
Materials in contact with the product	Anodized aluminum, chromed aluminum, POM, Stainless steel and Teflon	

Sagola 3400 Compact

Key new features

01 NOZZLES. Made of stainless steel.
Maximum application speed.

02 AIRCAPS. Made of duralumin. Highly resistant and light. EPA and HVLP Systems. Totally interchangeable. 4 aircaps to choose. Each compatible with all available fluid nozzle sizes. High transfer HVLP aircap. Designed under the highest environmental standards. Without pressure reducers in the body of the gun We convert from a conventional system to an HVLP system, only changing the aircap. Two high transfer EPA aircaps.

03 "SOFT FLOW" AIR VALVE.
Smooth trigger even at high air pressure levels.
No pressure drops between the 1st and 2nd stage of the trigger. Save paint by regulating air pressure with the trigger partially pulled (1st stage).

04 PRODUCT REGULATOR with FLOATING RING. For precise regulation of product flow.

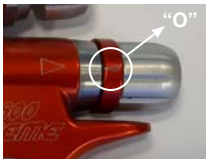

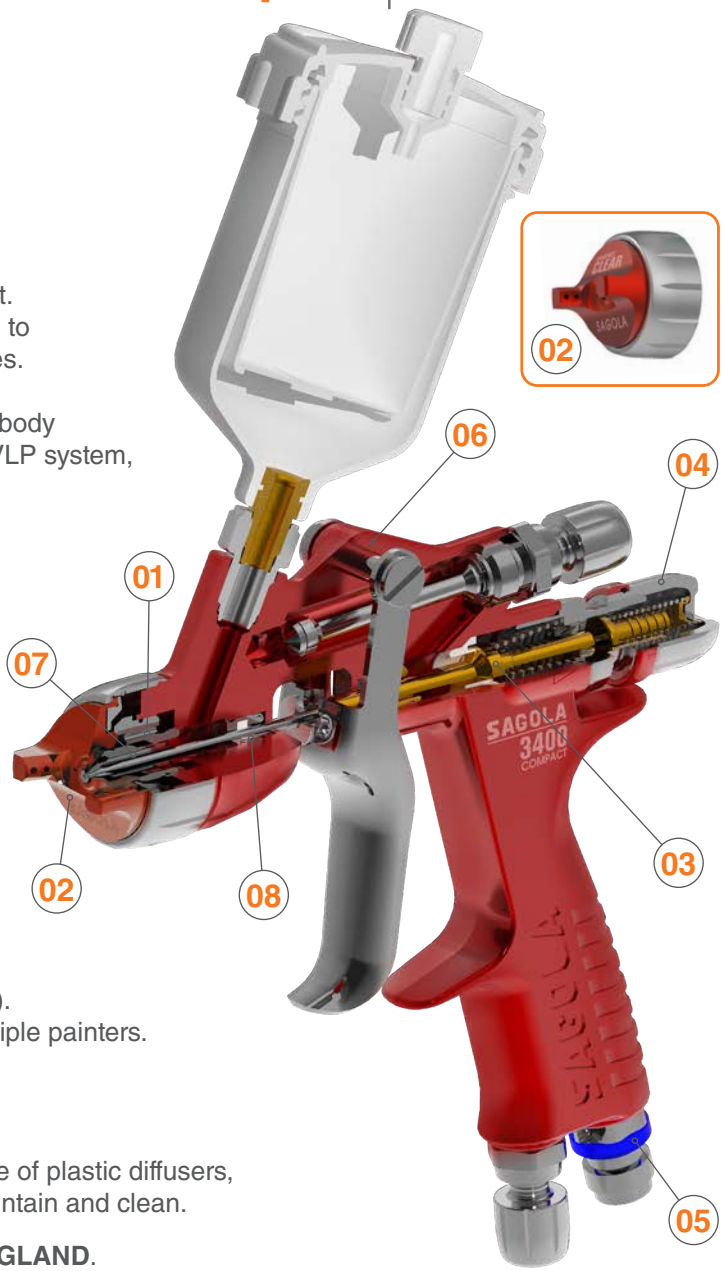

05 IDENTIFYING RINGS OF COLOURS. (COLOR CODE).
Perfect for differentiation of spray guns when there are multiple painters.

06 ANODIZED FORGED ALUMINUM BODY
High strength in just 365 grams

07 "METAL TO METAL" TECHNOLOGY. Product zone free of plastic diffusers, gaskets or inserts in the fluid nozzle. Extremely easy to maintain and clean.

08 One single piece AUTOMATIC PRODUCT PACKING GLAND.
Made of stainless steel. It avoids manipulation and breakage of the glands and makes easier to remove it for a through cleaning of the paint part.

09 AIR FLOW REGULATOR with GAUGE.
The RC1 pressure regulator is the perfect ally for the Non-digital version. Hand tighten, no wrench needed. Perfect closing. Without Teflon coating the air inlet of the gun.

10 SPECIAL MINI TECH JET ROUND AIRCAP.
Convert your Mini Xtreme to an airbrush.
Specially designed for low-viscosity products, lettering and small retouches.

11 CUP OPTIONS. (See page116)
- 125 ml. white cup
- 125 ml. black cup for UV products
- 500 ml. white cup
- 650 ml. white cup

Approved for use by leading paint brands. Visit www.sagola.com to download our Paint Application Guides.

Sagola 3400 Compact

COMPACT aircaps technical data / Versions

COMPACT CLEAR Air cap. High speed of application in low viscosity products. Suitable for any type of clearcoat. High level of atomization. Sagola EPA high transfer system.

Recommended application	Nozzle	Product output flow	Fan size	Application distance	Code 3400 Compact	Code 3400 Compact
SOLVENT BASECOAT "SMART REPAIR"	0.80	49 g/min. (1.7 oz/min.)	110 mm. (4.33")	18 - 20 cm. (7 - 7.9")	10112005	10112013
CLEARCOAT QUICK DRYING HS CLEARCOATS "SMART REPAIR"	1.00	97 g/min. (3.4 oz/min.)	195 mm. (7.68")		10112006	10112014
UHS CLEARCOATS "SPOT REPAIR"	1.20	162 g/min. (5.7 oz/min.)	260 mm. (10.24")		10112007	10112015
HS/UHS CLEARCOATS "SPOT REPAIR"	1.30	165 g/min. (5.8 oz/min.)	280 mm. (11.02")		-	10112016
PRIMERS FILLERS	1.40	174 g/min. (6.1 oz/min.)	280 mm. (11.02")		-	10112017
Air consumption at 2 bar (29 psi): 190 L/min. (6.71 cfm)			**Recommended pressure: 1.0 - 2.0 bar (14.5 - 29 psi)**		125 ml. Cup	650 ml. Cup

COMPACT TECH Air cap. Ideal for quick drying clearcoats. Low viscosity products. Lettering and small retouches.

Recommended application	Nozzle	Product output flow	Fan size	Application distance	Código 3400 Compact
PRIMERS "SMART REPAIR"	0.60	96 g/min. (3.4 oz/min.)	50 mm. (1.96")	18 - 20 cm. (7 - 7.9")	10112011
PRIMERS "SMART REPAIR"	1.00	123 g/min. (4.3 oz/min.)	195 mm. (7.68")		10112012
Air consumption at 2 bar (29 psi): 52 L/min. (1.84 cfm)			**Recommended pressure: 0.5 - 1.0 bar (7.2 - 14.5 psi)**		500 ml. Cup

"Smart Repair" Kit

All the equipment needed for spot repairs and small to medium surfaces.

Includes:
- 3400 Compact 1.0 (BASE)
- 3400 Compact 1.0 (HVLP)
- 1.2 mm. Nozzle + needle kit
- 0.6 mm. Nozzle + needle kit
- Compact Tech Air cap
- 125 & 500 ml. cup
- 2 x RC1 air flow regulators
- 2 x Quick couplings
- 2 3M™ PPS couplings
- Lubricant grease
- Accessories

Code
10141708

Types of cups (see page 116)

500 & 650 ml. White	125 ml. White	125 ml. Black

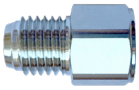

Cup couplings 125 ml. (includes)
Code 55711507

Sagola 3400 Compact

COMPACT aircaps technical data / Versions

COMPACT BASE Air cap. Special for waterborne product applications. Uniformity in colour application. Sagola EPA high transfer system.

Recommended application	Nozzle	Product output flow	Fan size	Application distance	Code 3400 Compact	Code 3400 Compact
SOLVENT BASECOAT "SMART REPAIR"	0.80	49 g/min. (1.7 oz/min.)	110 mm. (4.33")	18 - 20 cm. (7 - 7.9")	10112001	-
SOLVENT BASECOAT WATERBORNE BASEOCATS	1.00	97 g/min. (3.4 oz/min.)	195 mm. (7.68")		10112002	-
WATERBORNE BASEOCATS	1.20	162 g/min. (5.7 oz/min.)	260 mm. (10.24")		10112003	10112018
PRIMERS AND FILLERS	1.30	165 g/min. (5.8 oz/min.)	280 mm. (11.02")		-	10112019
PRIMERS AND FILLERS	1.40	174 g/min. (6.1 oz/min.)	280 mm. (11.02")		-	10112020
Air consumption at 2 bar (29 psi): 190 L/min. (6.71 cfm)			**Recommended pressure: 1.0 - 2.0 bar (14.5 - 29 psi)**		125 ml. Cup	650 ml. Cup

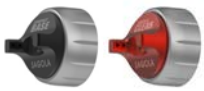

3400 Compact spray gun **especially** for **UV light** contact drying product applications.

Recommended application	Nozzle	Product output flow	Fan size	Application distance	Code 3400 Compact
WATERBORNE AND SOLVENT BASECOAT U.V. PRIMER "SPOT REPAIR"	1.20 BASE	162 g/min. (5.7 oz/min.)	260 mm. (10.24")	18 - 20 cm. (7 - 7.9")	10112004
	1.20 CLEAR	162 g/min. (5.7 oz/min.)	260 mm. (10.24")	18 - 20 cm. (7 - 7.9")	10112008
Air consumption at 2 bar (29 psi): 190 L/min. (6.71 cfm)			**Recommended pressure: 1.0 - 2.0 bar (14.5 - 29 psi)**		125 ml. **Black** Cup

UV protective cap for ultraviolet products. Included.

COMPACT HVLP Air cap. Uniformity in colour application. deal for waterborne products and quick-drying paints (HS). Sagola HVLP high transfer system.

Recommended application	Nozzle	Product output flow	Fan size	Application distance	Code 3400 Compact	Code 3400 Compact
PRIMERS "SMART REPAIR"	1.00	80 g/min. (1.7 oz/min.)	155 mm. (6.1")	18 - 20 cm. (7 - 7.9")	10112009	-
PRIMERS "SPOT REPAIR"	1.20	123 g/min. (3.4 oz/min.)	195 mm. (7.68")		10112010	-
PRIMERS "SPOT REPAIR"	1.30	133 g/min. (5.7 oz/min.)	215 mm. (8.46")		-	10112021
PRIMERS AND FILLERS	1.40	135 g/min. (4.7 oz/min.)	215 mm. (8.46")		-	10112022
Air consumption at 2 bar (29 psi): 325 L/min. (11.48 cfm)			**Recommended pressure: 1.0 - 2.0 bar (14.5 - 29 psi)**		125 ml. Cup	650 ml. Cup

Sagola 3400 Compact

Sagola 3400 Compact spare parts

SAGOLA is synonymous with quality and service. For this reason, SAGOLA provides a comprehensive spare parts and service guarantee, ensuring the proper maintenance of all its products, even those sold more than 10 years ago.
To ensure the best possible results and a high-quality finish, the spray gun must be thoroughly cleaned after each use and periodically checked for damaged or worn components. Any damaged or worn parts must be replaced.

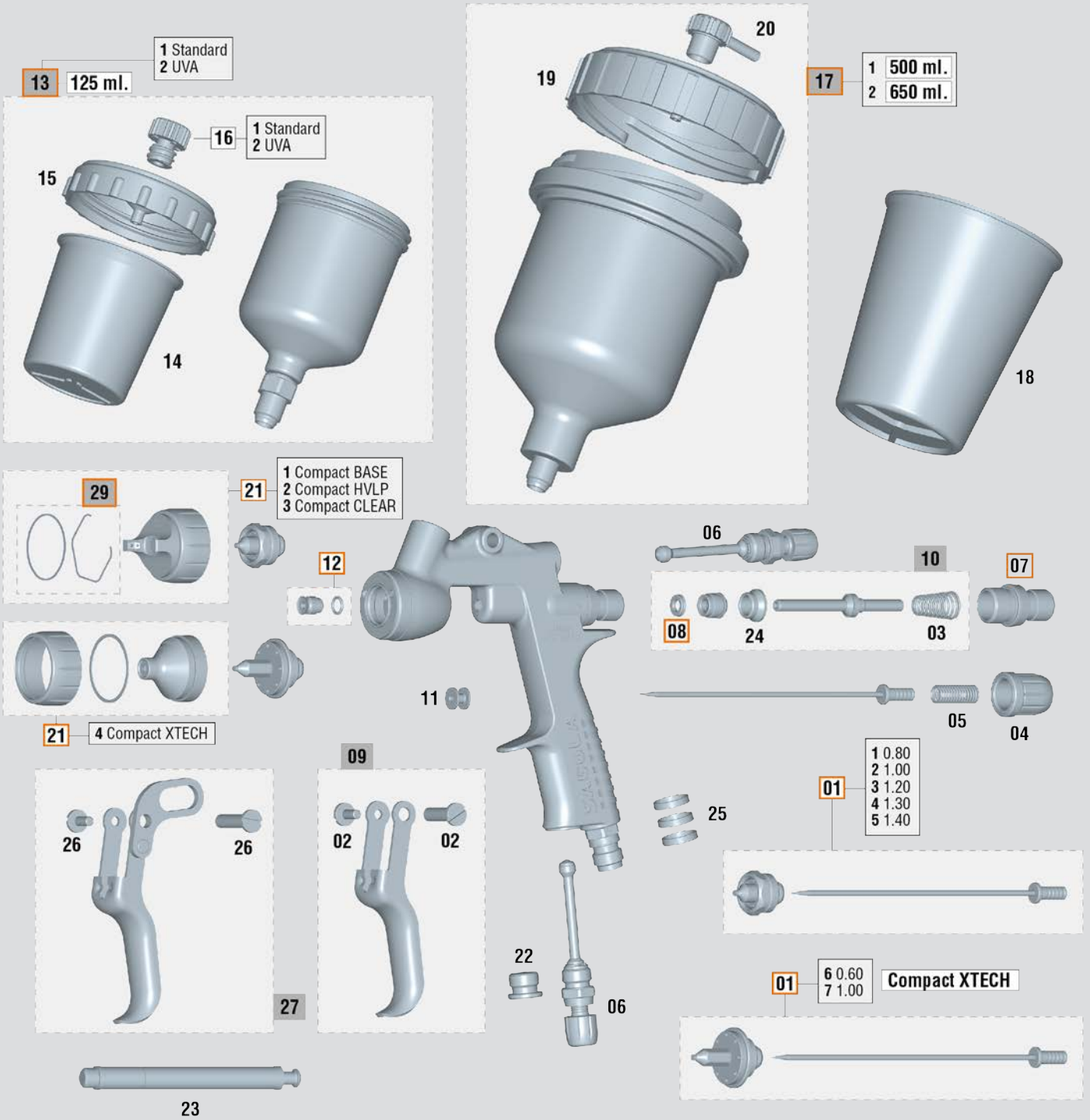

Latest updated version of the exploded view Sagola 3400 Compact

Sagola 3400 Compact

We call critical parts those that can stop the work of a spraygun: wear parts, gaskets, packings,... Sagola spray guns design offers **ONLY 6 CRITICAL PARTS (☐)**. Only 6 references in store to provide a 100% effective after-sales service.

SPARE PARTS — 3400 COMPACT

No.	Code	Description
01/1	**10011200**	**Kit nozzle + needle 0.80 Serie Compact**
01/2	**10011201**	**Kit nozzle + needle 1.00 Serie Compact**
01/3	**10011202**	**Kit nozzle + needle 1.20 Serie Compact**
01/4	**10011203**	**Kit nozzle + needle 1.30 Serie Compact**
01/5	**10011204**	**Kit nozzle + needle 1.40 Serie Compact**
01/6	**10011216**	**Kit nozzle + needle 0.60 Compact Tech**
01/7	**10011217**	**Kit nozzle + needle 1.00 Compact Tech**
02	56418429	Kit screw + trigger shaft (short)
03	54710312	Conical spring 10,6 x 6.7 x 29 x 1,05
04	56415121	Product regulator wheel
05	56410043	Spring + stop
06	56415252	Air flow / fan regulator
07	**56411623**	**Product needle guide box**
08	**56418441**	**Air valve washer (6 units)**
09	56418637	Trigger Kit
10	56418644	Air valve Kit
11	51910605	Bushing
12	**56418034**	**Complete packing nut Kit**
13	**56418081**	**Gravity cup 125 ml.**

SPARE PARTS — 3400 COMPACT

No.	Code	Description
14	56418061	Product filter 0,125 L cup (6 units)
15	57111502	Gravity cup top cover 0,125 L
16	55712119	Connection plug dripless flat
17/1	**56418080**	**Gravity cup 500 ml.**
17/1	**56418085**	**Gravity cup 650 ml.**
18	56418059	Product filter 0,5 L cup (10 units)
19	57111509	Gravity cup top cover 0,5 L
20	55712157	Connection plug dripless
21/1	**56418781**	**Aircap Compact BASE**
21/2	**56418783**	**Aircap Compact HVLP**
21/3	**56418782**	**Compact CLEAR**
21/4	**56418598**	**Aircap Compact TECH**
22	55712171	Connection plug 1/2” x20
23	50210214	Air valve assembly wrench
24	54110012	Air valve seating
25	56418635	Identification ring kit
26	56418439	Kit screw + trigger shaft (long)
27	56418714	Special Mini Tech Trigger Kit
29	56418680	Gasket nozzle Kit

This exploded view is not the material list of the spraygun

Clean the spraygun correctly. No metal tools. Only brushes. Lubricate the moving parts of the gun after each cleaning.

Cleaning kit Brush and sticks for optimum cleaning outside and inside the gun.

Code 40000086

Lubricant grease Natural grease. High consistency, even under extreme temperatures. Long lasting, it doesn’t lose properties over the time. 100 ml. can.

Code 56418589

Altair Led

Ultra LED Lighting System for the Sagola 3400 Compact spray gun.

Visual control of coat coverage and spray pattern overlap.

Ref. 12012000 (see page 48)

Sagola 475 XTech

Precision solutions for tiny details and retouches.

Very light injected-aluminium body.

Very high quality of spray.

The importance of small details

TECHNICAL DATA		SAGOLA 475 XTECH
Weight with cup (with air flow regulator)	339.4 grams	0.75 lbs
Weight without cup (with air flow regulator)	272.9 grams	0.60 lbs
Dimensions with cup (with air flow regulator)	12.1 x 6.7 x 28.3 cm.	4.76 x 2.64 x 11.14 “
Dimensions without cup	10.9 x 3.3 x 15.2 cm.	4.29 x 1.3 x 5.98 “
Air inlet connection	BSP 1/4” Male	
Cup	125 ml. (4.23 fl oz.) capacity Cup with anti-drip system	
Product filter	Includes 80-mesh product filters	
Recommended working pressure	2 bar	29 psi
Average sound pressure level	80 dB	
Materials in contact with the product	Anodized aluminum, chromed aluminum, POM, Stainless steel and Teflon	

Sagola 475 XTech

The SAGOLA 475 XTech spraygun that due to its reduced dimension becomes ideal for shadings, little retouches and/or painting of small parts.

Injected aluminum body, very light. Manufactured with Sagola high technology to provide a very high quality of atomization.

This model incorporates the high quality gravity cup with a 125 ml capacity. Includes paint filter.

Available with three aircaps. Variety of nozzles to give great precision to the retouching and painting of parts.

The **Sagola 475 XTech**, designed for **precision solutions** in the small details and retouching of bodyshop parts.

05 AIRCAP
High quality spray at feathering and retouches.
Nozzle available: 0.50 / 0.80

10 AIRCAP
Quick and versatile. Special for metallics and clearcoats.
Nozzle available: 1.00

R5 AIRCAP
Maximum precision at the tiniest feathering. Definition and regulation. Similar to an airbrush.
Nozzle available: 0.50

Very light injected-aluminium body

Injected-aluminium body. A highly manageable spraygun with reduced dimensions and low weight.

High quality of spray

High transfer and low air consumption.

Air flow regulator

Incorporates air flow regulator, high quality and precision.

Code 56418417

Technical data / Versions

Recommended application	Nozzle	Aircap	Product output flow	Fan size	Application distance
RETOUCHES AND FEATHERING	0.50	**05**	60 g/min. (2.12 oz/min.)	140 mm. (5.5”)	18 - 20 cm. (7 - 7.9”)
	0.80	**05**	73 g/min. (2.57 oz/min.)	162 mm. (6.4”)	
CLEARCOATS	1.00	**10**	90 g/min. (3.17 oz/min.)	160 mm. (6.3”)	
METALLICS					
TINY FEATHERING HIGH DEFINITION	0.50	**R5**	38 g/min. (1.34 oz/min.)	-	

Air consumption at 2 bar (29 psi):
05 Aircap: 100 L/min. (3.53 cfm)
10 Aircap: 110 L/min. (3.88 cfm)
R5 Aircap: 45 L/min. (1.59 cfm)

Recommended pressure:
1.5 - 2.0 bar (21.7 - 29 psi)

Code 475 XTech
20140801
20140802
20140803
20140804
125 ml. cup

Accessories

Code	Description
56418081	125 ml. (4.23 fl oz) Gravity cup - *includes product filter*
56418079	200 ml. (6.76 fl oz) Gravity cup - *includes product filter*
56418061	Product filter (6 units)

Sagola 475 XTech

Sagola 475 XTech spare parts

SAGOLA is synonymous with quality and service. For this reason, SAGOLA provides a comprehensive spare parts and service guarantee, ensuring the proper maintenance of all its products, even those sold more than 10 years ago.
To ensure the best possible results and a high-quality finish, the spray gun must be thoroughly cleaned after each use and periodically checked for damaged or worn components. Any damaged or worn parts must be replaced.

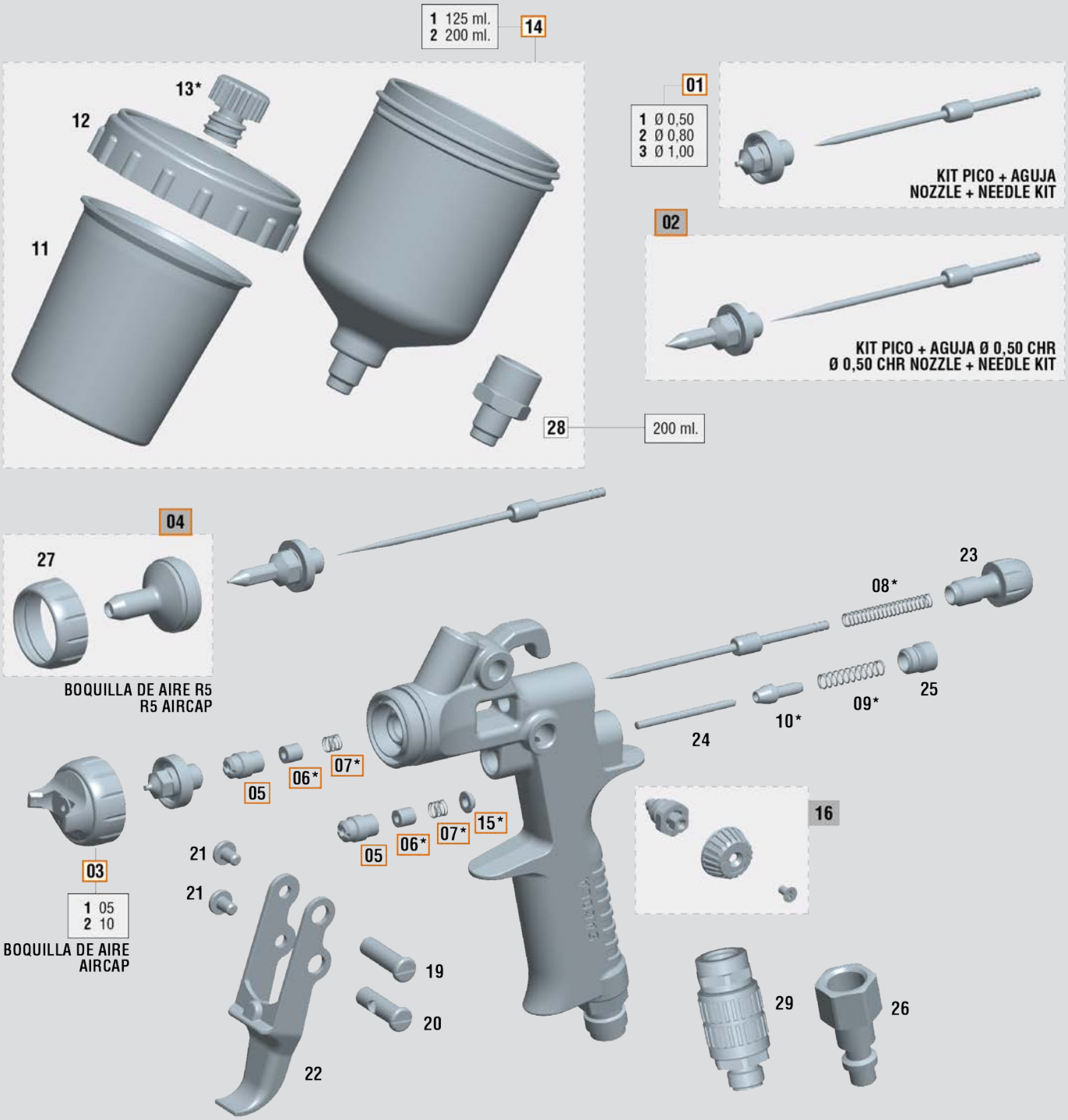

Latest updated version of the exploded view Sagola 475 XTech

Sagola 475 XTech

We call critical parts those that can stop the work of a spraygun: wear parts, gaskets, packings,... Sagola spray guns design offers **ONLY 6 CRITICAL PARTS (☐)**. Only 6 references in store to provide a 100% effective after-sales service.

SPARE PARTS — SAGOLA 475 XTECH

No.	Code	Description
01/1	**10011195**	**Kit nozzle + needle 0.50 Serie 475**
01/2	**10011197**	**Kit nozzle + needle 0.80 Serie 475**
01/3	**10011198**	**Kit nozzle + needle 1.00 Serie 475**
02	**10011196**	**Kit nozzle + needle 0.50 CHR Serie 475**
03/1	**56418246**	**Aircap 05**
03/2	**56418247**	**Aircap 10**
04	**56418271**	**Aircap R5 + nut**
05	**57212215**	**Packing gland Screw**
06	**54210224**	**Packing closure washer**
07	**54710204**	**Cylindrical spring 5 x 9 x 0.5**
08	54710202	Cylindrical spring 4.5 x 40 x 0.6
09	54710203	Cylindrical spring 4.9 x 30 x 0.6
10	57510703	Air valve
11	56418061	Gravity cup product filter (6 units)
12	57111502	Gravity cup lid
13	55712119	Connection plug dripless flat

SPARE PARTS — SAGOLA 475 XTECH

No.	Code	Description
14/1	**56418081**	**Gravity cup 0.125 L**
14/2	56418079	Gravity cup 0.200 L
15	**51911519**	**Valve spring stop bushing**
16	56418508	Fan regulator Kit
19	53110911	Trigguer shaft
20	53110011	Pusher shaft
21	57211502	Trigger shaft screw
22	56413703	Gatillo
23	57810311	Product regulator wheel
24	50310102	Air valve needle
25	56414921	Air valve plug + gasket
26	11020520	Connector BSPP 1/4" F US-Mil (2 units)
27	57410445	Aircap nut
28	55711513	Coupling M12x150 F - M10x100 M
29	56418417	Air flow regulator 1/4" M-F

This exploded view is not the material list of the spraygun

Clean the spraygun correctly. No metal tools. Only brushes. Lubricate the moving parts of the gun after each cleaning.

Cleaning kit Brush and sticks for optimum cleaning outside and inside the gun.

Code 40000086

Lubricant grease Natural grease. High consistency, even under extreme temperatures. Long lasting, it doesn't lose properties over the time. 100 ml. can.

Code 56418589

XTech Airbrushes

High-performance airbrushes. Ideal for automotive, fine arts, body painting, illustration, make-up, modelling, cake decoration, temporary tattooing, and more.

(see page 119)

Sagola Altair LED

Highly efficient 4500 Kelvin led that replicates the sun light. Perfect spray control of metallics, pearls and clear coats.

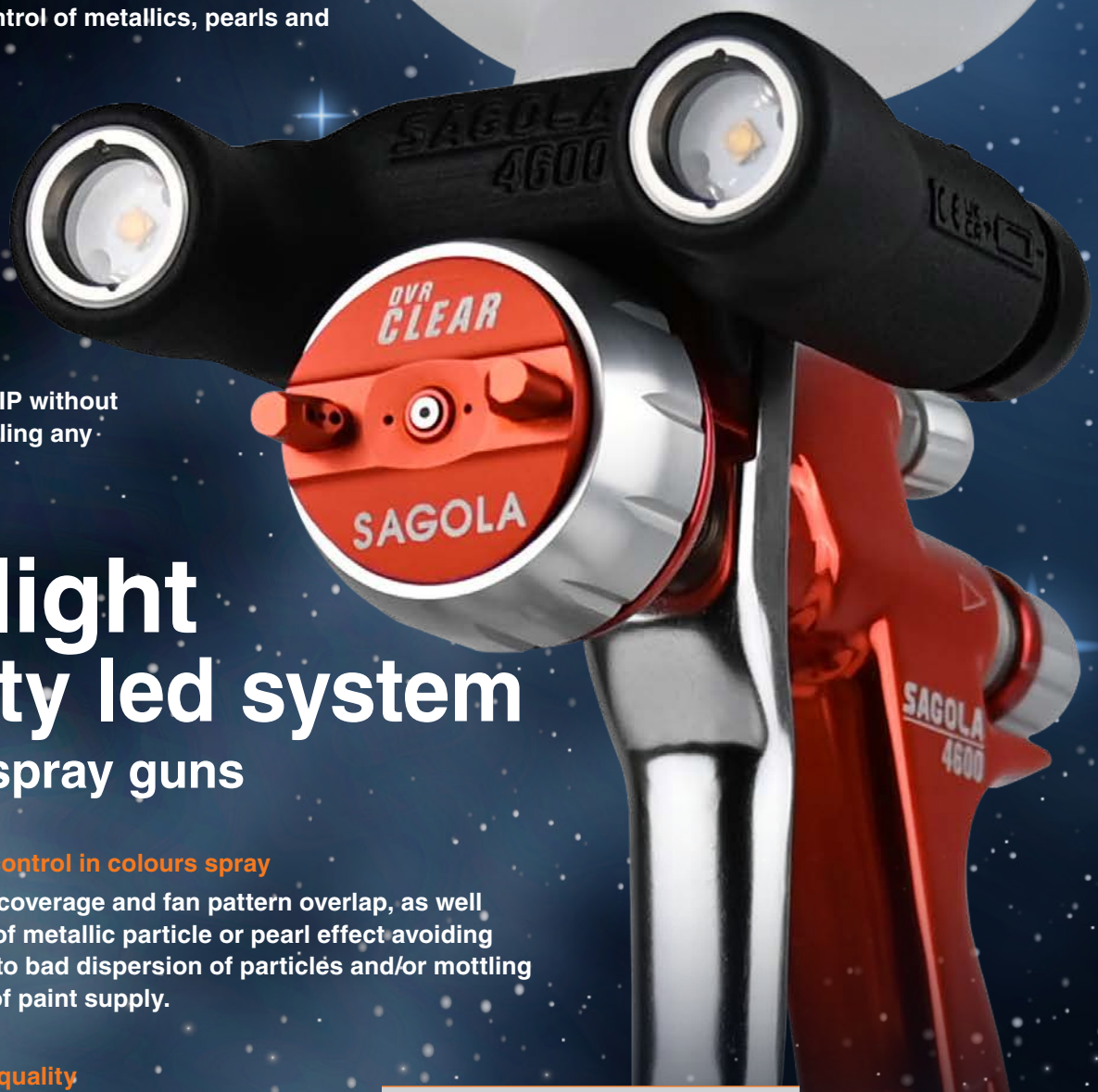

CLIP&GO system

It is assembled in a CLIP without the need of disassembling any element from the gun.

High light intensity led system

for Sagola spray guns

High precision visual control in colours spray

Visual control of layer coverage and fan pattern overlap, as well as correct orientation of metallic particle or pearl effect avoiding variations of tone due to bad dispersion of particles and/or mottling due to lack or excess of paint supply.

Improvement of finish quality

As in the colour base, a better control of layer dispersion and fan pattern overlap will be achieved avoiding irregular clear coat supply (lack or excess material), gloss irregularities, load irregularity (orange peel).

Version	Code
Altair Led Sagola 4600	12010000
Altair Led Sagola 3300 GTO	12011000
Altair Led Sagola 3400 Compact	12012000
Altair Led Sagola 3600 XPT	12013000

TECHNICAL DATA	ALTAIR LED	
Leds (2 units)	4,500 Kelvin (CRI: 92)	
Batteries	Lithium 3.7 V 4.07 Wh AA size	
Light scattering	510 lumens	
Batteries life	Level 1: 160 minutes	Level 2: 80 minutes
Weight	118 g. with batteries	0.26 lbs with batteries
Materials	Polyamide, POM, stainless steel and glass	

Sagola Altair LED

Sagola Altair LED spare parts

SAGOLA is synonymous with quality and service. For this reason, SAGOLA provides a comprehensive spare parts and service guarantee, ensuring the proper maintenance of all its products, even those sold more than 10 years ago.
To ensure the best possible results and a high-quality finish, the spray gun must be thoroughly cleaned after each use and periodically checked for damaged or worn components. Any damaged or worn parts must be replaced.

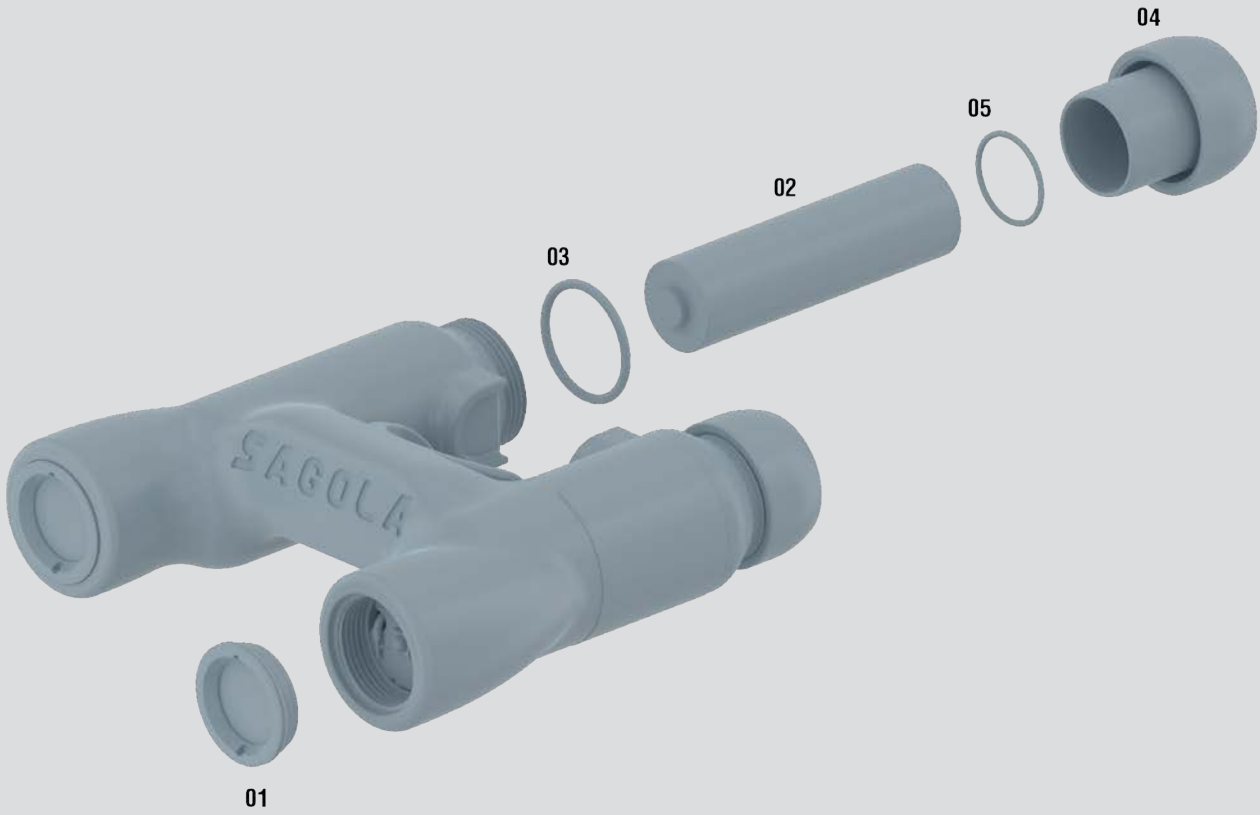

SPARE PARTS **ALTAIR LED**

No.	Code	Description
01	56410065	Viewfinder
02	52310011	Lithium Battery
03	56418739	O-ring
04	56417912	Wheel
05	56418740	O-ring

Latest updated version of the exploded view Sagola Altair LED

This exploded view is not the material list of the equipment

Sagola 2100 XD

BUDGET-FRIENDLY PERFORMANCE

The Sagola 2100 XD is a reliable and solid choice for applying top coats, including both base and clear coats, especially for professionals and hobbyists who want great results on a budget.

Reliable Performance for perfect Top Coats

VERSATILE AND CONSISTENT

The Sagola 2100 XD can handle a variety of materials and, thanks to its ability to produce a wide and even fan pattern, is versatile enough to be used for a wide range of base and clearcoats.

TECHNICAL DATA		SAGOLA 2100 XD
Weight with cup:	665 grams	1.47 lbs
Weight without cup:	480 grams	1.06 lbs
Dimensions without cup	17.9 x 1.9 x 17.7 cm.	7.05 x 0.75 x 6.96 “
Air inlet connection	BSP 1/4” Male (high flow)	
Cup	650 ml. capacity (22 fl oz.) Cup with anti-drop system	
Product filter	It incorporates 80-mesh product filters	
Recommended working pressure	1.4 - 2.2 bar	20.3 - 31.9 psi
Average sound pressure level	80 dB	
Materials in contact with the product	Anodised aluminium, chrome-plated aluminium, stainless steel, polyoxymethylene and Teflon	

M2M™
Metal to Metal Technology

Sagola 2100 XD

The Sagola 2100 XD is a spray gun designed to offer the perfect balance between finish quality and cost efficiency.

Intended for both professionals and demanding users, it stands out for its reliability, ease of use and ability to adapt to different types of materials.

Its robust design and excellent atomisation allow for fine, uniform and consistent finishes, even in basecoat and clearcoat applications.

A versatile tool that delivers high-level results with a controlled investment.

XD TECH aircaps technical data / Versions

XD TECH Air cap. For optimal results in finishing coats. Fine finish and atomisation. Sagola EPA high-transfer system.

Recommended application	Nozzle	Product output flow	Fan size	Application distance	Code 2100 XD
WATERBORNE BASECOAT	1.30	159 g/min. (5.6 oz/min.)	275 mm. (10.8”)	18 - 20 cm. (7 - 7.9”)	10141635
HS CLEARCOAT					
SOLVENT BASECOAT	1.40	169 g/min. (6.1 oz/min.)	285 mm. (11.2”)		10141638
SINGLE STAGE					
UHS CLEARCOAT					

Air consumption at 2 bar (29 psi): 285 L/min. (10.1 cfm)

Recommended pressure: 1.4 - 2.0 bar (20 - 29 psi)

Metal to Metal™ technology

Greater reliability, easy cleaning and low maintenance costs.

For over 70 years, Sagola has been manufacturing industry-leading spray equipment and is often considered a benchmark in the sector.

Our modern European production facilities use aerospace-grade engineering, allowing us to manufacture spray guns with Metal-to-Metal technology, meaning fewer seals and fewer wear parts than any other spray gun on the market.

- Easy maintenance
- Fewer wear parts
- Low maintenance costs
- Easy to clean
- No packings, seals or plastic parts in the fluid area
- Reliability and robustness

Sagola 2100 XD

Sagola 2100 XD spare parts

SAGOLA is synonymous with quality and service. For this reason, SAGOLA provides a comprehensive spare parts and service guarantee, ensuring the proper maintenance of all its products, even those sold more than 10 years ago.
To ensure the best possible results and a high-quality finish, the spray gun must be thoroughly cleaned after each use and periodically checked for damaged or worn components. Any damaged or worn parts must be replaced.

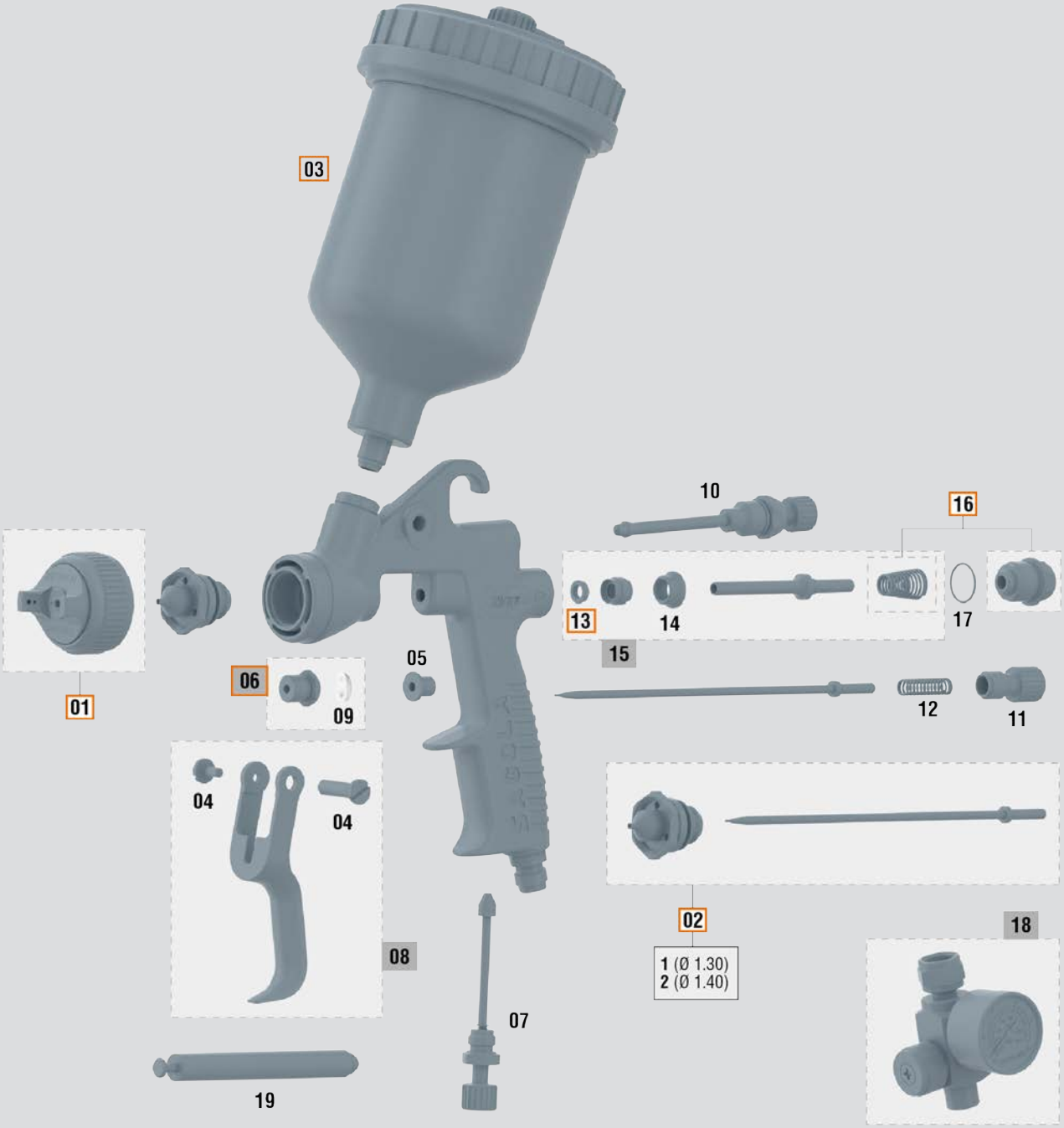

Latest updated version of the exploded view Sagola 2100 XD

Sagola 2100 XD

We call critical parts those that can stop the work of a spraygun: wear parts, gaskets, packings,... Sagola spray guns design offers **ONLY 6 CRITICAL PARTS** ( ). Only 6 references in store to provide a 100% effective after-sales service.

SPARE PARTS — SAGOLA 2100 XD

No.	Code	Description
01	**56418738**	**Kit air nozzle XD TECH**
02/1	**10011293**	**Kit nozzle + needle 1.30**
02/2	**10011254**	**Kit nozzle + needle 1.40**
03	**56418085**	**Kit gravity cup 0.65 L**
04	56418429	Kit Screw + Gun trigger sahft
05	51910608	Trigger needle guide bushing
06	**56411619**	**Packing nut complete**
07	49000739	Air regulator
08	56418637	Trigger kit
09	54210224	Packing closing washer

SPARE PARTS — SAGOLA 2100 XD

No.	Code	Description
10	49000714	Fan regulator
11	57810380	Product regulator wheel
12	54710275	Spring
13	**56418494**	**Kit valve washer (6 units)**
14	49000799	Insert bushing
15	56418777	Valve kit
16	**56418701**	**Kit product needle + spring**
17	54250822	O-ring
18	40000335	RC2 air flow regulator
19	50210214	Key assembly valve

This exploded view is not the material list of the spraygun

Clean the spraygun correctly. No metal tools. Only brushes. Lubricate the moving parts of the gun after each cleaning.

Cleaning kit Brush and sticks for optimum cleaning outside and inside the gun.

Code 40000086

Lubricant grease Natural grease. High consistency, even under extreme temperatures. Long lasting, it doesn't lose properties over the time. 100 ml. can.

Code 56418589

(see page 115)

RC2
Air Flow Regulator

High-quality air regulator with pressure gauge, featuring a green scale for high-transfer spray guns.

Code 40000335

Sagola Classic Pro XD

The Sagola Classic Pro XD Primer Gun incorporates EPA and HVLP high transfer air caps.

"Metal to metal" technology. No joints or plastic parts in the product area.

Nozzle and needle made of stainless steel.

Matt chrome-plated injected aluminum body.

Maximum ergonomics and comfort.

High transfer in fillers and primers

TECHNICAL DATA		CLASSIC PRO XD
Weight with cup	665 grams	1.47 lbs
Weight without cup	480,8 grams	1.06 lbs
Dimensions without cup	17.9 x 1.9 x 17.7 cm.	7.05 x 0.75 x 6.96 "
Air inlet connection	BSP 1/4" Male	
Cup	650 ml. (22 fl oz.) capacity Cup with anti-drip system	
Recommended working pressure	2 bar	29 psi
Materials in contact with the product	Anodized aluminum, chromed aluminum, POM, Stainless steel and Teflon	

M2M™
Metal to Metal Technology

Sagola Classic Pro XD

Classic Pro XD aircaps technical data / Versions

21 EPA Air cap. Sagola EPA high transfer technology that combines high transfer rates with high atomization capacity. Low air consumption.

Recommended application	Nozzle	Product output flow	Fan size	Application distance	Code Classic Pro XD
FINISHES	1.30	139 g/min. (4.90 oz/min.)	283 mm. (11.1”)	18 - 20 cm. (7 - 7.9”)	10141633
	1.40	143 g/min. (5.04 oz/min.)	285 mm. (11.2”)		10141620
SANDING FILLERS	1.60	147 g/min. (5.19 oz/min.)	290 mm. (11.4”)		10141623
	1.80	179 g/min. (6.31 oz/min.)	320 mm. (12.6”)		10141625

Air consumption at 2 bar (29 psi):
225 L/min. (7.95 cfm)

Recommended pressure:
1.5 - 2.0 bar (21.7 - 29 psi)

HVLP Air cap. Compliance with the strictest environmental regulations. High Transfer HVLP Technology. High application speed.

Recommended application	Nozzle	Product output flow	Fan size	Application distance	Code Classic Pro XD
FINISHES	1.30	137 g/min. (4.83 oz/min.)	281 mm. (11,1”)	12 - 15 cm. (4.7 - 5.9”)	10141634
	1.40	143 g/min. (5.04 oz/min.)	285 mm. (11.2”)		10141621
SANDING FILLERS	1.60	202 g/min. (7.13 oz/min.)	250 mm. (9.8”)		10141624
	1.80	235 g/min. (8.29 oz/min.)	280 mm. (11.2”)		10141626

Air consumption at 2 bar (29 psi):
355 L/min. (11.54 cfm)

Recommended pressure:
1.5 - 2.0 bar (21.7 - 29 psi)

25 & 36 Air caps. Specially designed for the application of high thickness fillers.
28 Air cap. The best option for the application of gun fillers on large surfaces.
High product flow rates for thick products.

Recommended application	Nozzle	Aircap	Product output flow	Fan size	Application distance	Code Classic Pro XD
FILLERS HIGH THICKNESS	2.00	**25**	218 g/min. (7.69 oz/min.)	250 mm. (9.8”)	18 - 20 cm. (7 - 7.9”)	10141627
	2.50	**36**	249 g/min. (8.78 oz/min.)	280 mm. (11.2”)		10141629
GUN FILLER	2.80	**28**	263 g/min. (9.29 oz/min.)	250 mm. (9.8”)		10141630

Air consumption at 2 bar (29 psi):
25 Aircap: 155 L/min. (5.47 cfm)
36 Aircap: 205 L/min. (7.24 cfm)
28 Aircap: 240 L/min. (8.48 cfm)

Recommended pressure:
1.8 - 2.5 bar (26.10 - 36.26 psi)

Sagola Classic Pro XD

Sagola Classic Pro XD spare parts

SAGOLA is synonymous with quality and service. For this reason, SAGOLA provides a comprehensive spare parts and service guarantee, ensuring the proper maintenance of all its products, even those sold more than 10 years ago.
To ensure the best possible results and a high-quality finish, the spray gun must be thoroughly cleaned after each use and periodically checked for damaged or worn components. Any damaged or worn parts must be replaced.

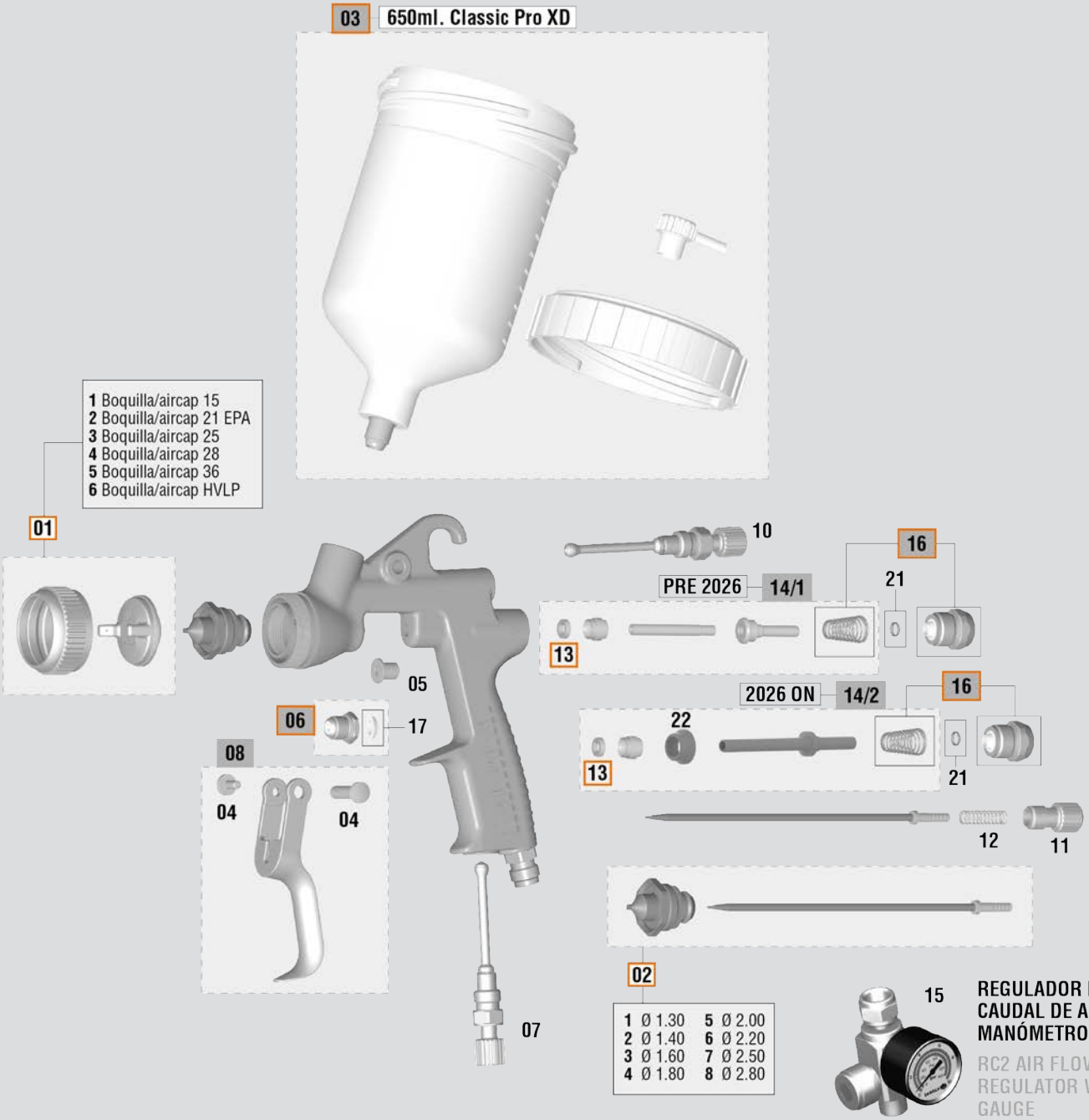

REGULADOR DE CAUDAL DE AIRE CON MANÓMETRO RC2

RC2 AIR FLOW REGULATOR WITH GAUGE

Latest updated version of the exploded view Sagola Classic PRO XD

Sagola Classic Pro XD

We call critical parts those that can stop the work of a spraygun: wear parts, gaskets, packings,... Sagola spray guns design offers **ONLY 6 CRITICAL PARTS** ( ). Only 6 references in store to provide a 100% effective after-sales service.

SPARE PARTS — CLASSIC PRO XD

No.	Code	Description
01/1	**56418638**	**Aircap 15 + nut (black)**
01/2	**56418639**	**Aircap 21 EPA + nut (black)**
01/3	**56418640**	**Aircap 25 + nut (black)**
01/4	**56418641**	**Aircap 28 + nut (black)**
01/5	**56418642**	**Aircap 36 + nut (black)**
01/6	**56418643**	**Aircap HVLP + nut (black)**
02/1	**10011293**	**Kit nozzle + needle 1.30 Serie CI Pro XD**
02/2	**10011254**	**Kit nozzle + needle 1.40 Serie CI Pro XD**
02/3	**10011255**	**Kit nozzle + needle 1.60 Serie CI Pro XD**
02/4	**10011256**	**Kit nozzle + needle 1.80 Serie CI Pro XD**
02/5	**10011257**	**Kit nozzle + needle 2.00 Serie CI Pro XD**
02/6	**10011258**	**Kit nozzle + needle 2.20 Serie CI Pro XD**
02/7	**10011259**	**Kit nozzle + needle 2.50 Serie CI Pro XD**
02/8	**10011260**	**Kit nozzle + needle 2.80 Serie CI Pro XD**
03	**56418085**	**Gravity cup 0.65 L**
04	56418429	Screw + trigger shaft (short)
05	51910608	Trigger needle guide bushing

SPARE PARTS — CLASSIC PRO XD

No.	Code	Description
06	**56411619**	**Complete packing nut Kit**
07	49000739	Fan regulator Kit
08	56418637	Trigger
10	49000714	Fan regulator Kit
11	57810380	Product regulator wheel
12	54710275	Cylindrical spring 6.8 x 31 x 0.9
13	**56418494**	**Air valve gasket (6 units)**
14	56418481	Air valve Kit
15	40000335	RC2 air flow regulator
16	**56418701**	**Product needle guide box + spring**
17	54210224	Packing closure washer

This exploded view is not the material list of the spraygun

Clean the spraygun correctly. No metal tools. Only brushes. Lubricate the moving parts of the gun after each cleaning.

Cleaning kit Brush and sticks for optimum cleaning outside and inside the gun.

Code 40000086

Lubricant grease Natural grease. High consistency, even under extreme temperatures. Long lasting, it doesn't lose properties over the time. 100 ml. can.

Code 56418589

(see page 115)

RC2
Air Flow Regulator

High-quality air regulator with pressure gauge, featuring a green scale for high-transfer spray guns.

Code 40000335

Sagola Classic LUX

The Sagola Classic Lux is a versatile spray gun, ideal for primers and surface sanding, making it a highly adaptable tool.

Robustness and Versatility

It excels with high-viscosity surfacers thanks to the availability of larger nozzle sizes.

Its chrome-plated body and stainless steel components are designed for durability, especially when used with abrasive primers.

The spray gun offers precise control and low air consumption, combining efficiency with a comfortable and ergonomic design.

TECHNICAL DATA		CLASSIC LUX
Weight with cup	674 grams	1.49 lbs
Weight without cup	485.5 grams	1.07 lbs
Dimensions with cup	17.7 x 10.5 x 33 cm.	6.97 x 4.13 x 13 “
Dimensions without cup	17.7 x 1.9 x 17.1 cm.	6.97 x 0.75 x 6.73 “
Air inlet connection	BSP 1/4” Male	
Cup	650 ml. (22 fl oz.) capacity Cup with anti-drip system	
Recommended working pressure	2 bar	29 psi
Materials in contact with the product	Anodized aluminum, chromed aluminum, POM, Stainless steel and Teflon	

M2M™
Metal to Metal Technology

Sagola Classic LUX

The SAGOLA Classic LUX gun offers one of the best quality/price ratios in its range of conventional primer guns.

With a new body design and improved ergonomics, the Classic LUX spraygun expands the range of responses and application solutions.

Single shaft design. Less number of parts, minimum maintenance. No joints between the air and the paint. One piece packing gland. Internal air distributor.

Nozzles and needles in stainless steel. Air, product and fan flow regulators.

40 AIRCAP
Primers and fillers
Available nozzles:
1.40 / 1.60 / 1.80

41 AIRCAP
Primers and fillers
High thickness
Available nozzles: 2.00

42 AIRCAP
Fillers
High viscosity. Gun fillers.
Available nozzles: 2.50

Cup

650 ml. cup capacity. Includes anti-drip system and paint filter.

Low air consumption

High quality of aircaps, with low air consumption.

Body

Novelty in the chrome of the gun body. Matte chrome.

Nozzle and Needle

Made of stainless steel.

Classic Lux aircaps technical data / Versions

Recommended application	Nozzle	Aircap	Product output flow	Fan size	Application distance	Code Classic Lux
FINISHES	1.40	40	218 g/min. (7.7 oz/min.)	210 mm. (8.26”)	18 - 20 cm. (7 - 7.9”)	20141406
PRIMERS AND FILLERS	1.60	40	125 g/min. (4.4 oz/min.)	215 mm. (8.46”)		20141401
FILLERS	1.80	40	217 g/min. (7.6 oz/min.)	250 mm. (9.84”)		20141402
FILLERS HIGH THICKNESS	2.00	41	206 g/min. (7.3 oz/min.)	255 mm. (10.04”)	18 - 20 cm. (7 - 7.9”)	20141404
PUTTIES	2.50	42	144 g/min. (5.1 oz/min.)	215 mm. (8.46”)		20141403

Air consumption at 2 bar (29 psi):
40 Aircap: 190 L/min. (6.71 cfm)
41 Aircap: 210 L/min. (7.42 cfm)
42 Aircap: 220 L/min. (7.77 cfm)

Recommended pressure:
1.5 - 2.5 bar (21.7 - 36.26 psi)

Accessories

Code	Description
56418420	Gravity cup 650 ml. (6.76 fl oz) - *includes product filter*
56418017	Gravity cup product filter 650 ml. (10 units)
40000335	RC2 Air flow regulator with pressure gauge

RC2 Air flow regulator with pressure gauge
(see page 115)

Sagola Classic LUX

Sagola Classic LUX spare parts

SAGOLA is synonymous with quality and service. For this reason, SAGOLA provides a comprehensive spare parts and service guarantee, ensuring the proper maintenance of all its products, even those sold more than 10 years ago.
To ensure the best possible results and a high-quality finish, the spray gun must be thoroughly cleaned after each use and periodically checked for damaged or worn components. Any damaged or worn parts must be replaced.

Latest updated version of the exploded view Sagola Classic LUX

Sagola Classic LUX

We call critical parts those that can stop the work of a spraygun: wear parts, gaskets, packings,... Sagola spray guns design offers **ONLY 5 CRITICAL PARTS** ( ). Only 6 references in store to provide a 100% effective after-sales service.

SPARE PARTS — CLASSIC LUX

No.	Code	Description
01/1	**10011370**	**Kit nozzle + needle 1.60 + Aircap 40**
01/2	**10011371**	**Kit nozzle + needle 1.80 + Aircap 40**
01/3	**10011372**	**Kit nozzle + needle 2.00 + Aircap 41**
01/4	**10011373**	**Kit nozzle + needle 2.50 + Aircap 42**
01/7	**10011380**	**Kit nozzle + needle 1.40 + Aircap 40**
03	**56418420**	**Gravity cup 650 ml.**
04	56418017	Gravity cup product filter 0.65L (10 units)
05	56418715	Air valve Kit
06	54710414	Cylindrical spring 32 x 11 x 1.1
07	**56418494**	**Air valve gasket**
09	54250932	O-ring 11.11 x 1.80 nitrile
10	**56418701**	**Guide box Kit + spring**
11	57810378	Product regulator wheel
12	51910608	Trigger needle guide bushing

SPARE PARTS — CLASSIC LUX

No.	Code	Description
13	**56411619**	**Complete packing nut Kit**
14	56415251	Air flow regulator Kit
15	56415237	Fan regulator Kit
16	56418429	Screw + trigger shaft (short)
17	56418637	Trigger
18	11020520	Coupling BSPP 1/4" F US-Mil (2 units)
23	54710275	Cylindrical spring 6.8 x 31 x 0.9
24	54210224	Packing closure washer

This exploded view is not the material list of the spraygun

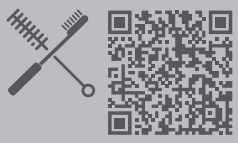

Clean the spraygun correctly. No metal tools. Only brushes. Lubricate the moving parts of the gun after each cleaning.

Cleaning kit Brush and sticks for optimum cleaning outside and inside the gun.

Code 40000086

Lubricant grease Natural grease. High consistency, even under extreme temperatures. Long lasting, it doesn't lose properties over the time. 100 ml. can.

Code 56418589

(see page 115)

RC2
Air Flow Regulator

High-quality air regulator with pressure gauge, featuring a green scale for high-transfer spray guns.

Code 40000335

02

Industrial Bodyshop

We transfer all the experience and quality that our trajectory in the industrial sector gives us to the bodywork of large vehicles.

With a thorough selection of our products to give the highest quality finishes to industries dedicated to the painting of industrial vehicles.

Range of spray guns with high quality finishes, high reliability and robustness.

Pumps and pressure pots, ease of use and minimum maintenance to give a great service to professional painting.

Sagola X4100 series

X 4100 SERIES

The Legend of Industrial finishing

TECHNICAL DATA		X 4100 SERIES
Weight with cup: (gravity version)	722.6 grams	1.39 lbs
Weight with deposit: (suction version)	920 grams	1.98 lbs
Weight without cup: (gravity version)	496 grams	1.1 lbs
Weight with deposit: (suction/pressure version)	524.75 grams	1.1 lbs
Dimensions with cup: (gravity version)	17.2 x 10.5 x 34.2 cm.	6.77 x 4.13 x 13.46 “
Dimensions with deposit: (suction version)	18.3 X 10.4 X 29.6 cm.	7.20 x 4.09 x 11.65 “
Dimensions without cup: (gravity version)	17.2 x 1.9 x 17.3 cm.	6.78 x 0.75 x 6.83 “
Dimensions without deposit: (suction/pressure version)	17.2 X 1.9 X 18.2 cm.	6.78 x 0.75 x 7.18 “
Air inlet connection	BSP 1/4” Male	
Cup / Deposit	Gravity: 650 ml. capacity (22 fl oz.) Cup with anti-drip system Suction: 1,000 ml. capacity (34 fl oz.) Deposit with anti-drip system Pressure: Product input through pressure pot or pneumatic pump	
Product filter	Gravity: 100 mesh | Pressure: 60/100 mesh	
Recommended working pressure	Gravity: 2 bar (29 psi)	Suction: 2 - 3 bar (29 - 43.5 psi)
Average sound pressure level	80 dB	
Materials in contact with the product	Anodized aluminum, chromed aluminum, POM, Stainless steel and Teflon	

Sagola X4100 series

Wide range of air caps and multiple fluid nozzle sizes, fully interchangeable.

More than 200 possible nozzle and needle configurations.

An X 4100 Series for every project.

Ergonomics

Shifted centre of gravity thanks to aluminium air caps. Lighter forged aluminium body. Reduced fatigue during extended use. Swivel filter holder in pressure version.

Durability

Lower maintenance costs = higher productivity thanks to our “metal-to-metal” technology: no seals or plastic parts in the fluid section.

Speed

Sagola DVR suction technology for unmatched application speeds.

Material savings

Sagola EPA and HVLP high-transfer air caps. Maximum reduction of overspray.

M2M™
Metal to Metal Technology

Sagola X4100 series

Pressure version

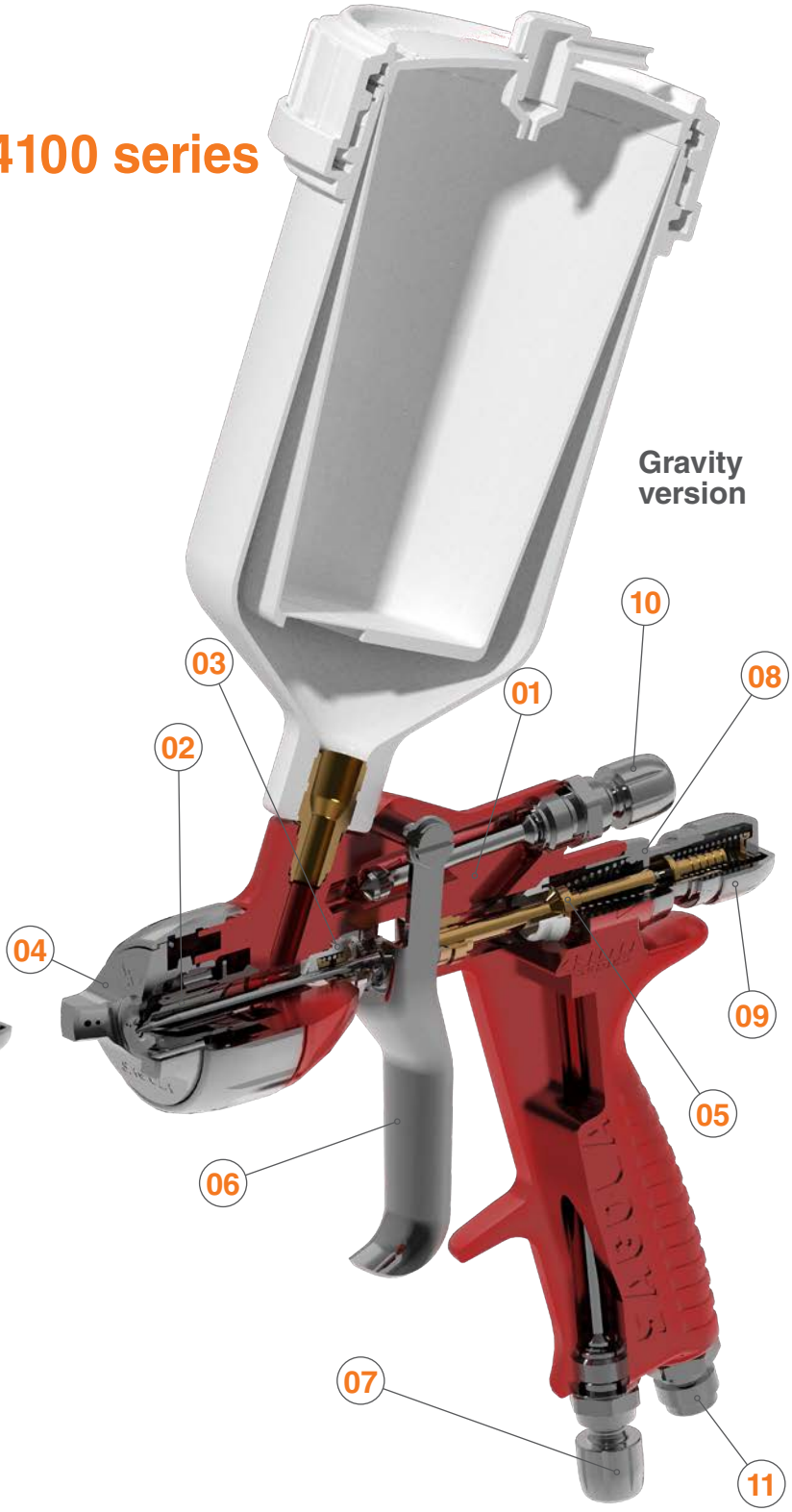

Gravity version

Suction version

ULTRA SOFT FLOW VALVE*

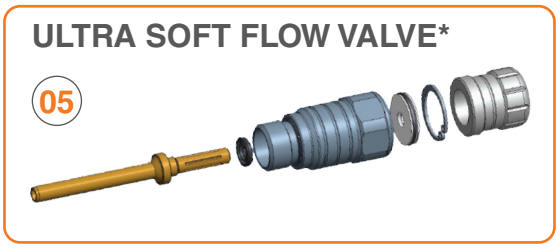

Sagola X4100 series

Key new features

The spare parts range is standardised across the entire family. This reduces storage costs and improves response times for industries using multiple versions of this model, whether suction, pressure or gravity-fed. To these advantages, we can also add the well-known benefits:

01 Forged and anodized aluminum **BODY.** Great robustness, lightness and high corrosion protection.
Register DC 3 300.029

02 NOZZLES AND NEEDLES made of stainless steel. High precision. High flow. Maximum application speed.

03 High durability **AUTOMATIC PRODUCT PACKING GLAND.** One single piece. Stainless steel body in quick-change format. Avoid manipulation and breakage of the glands and facilitates their disassembly for the integral cleaning of the paint area. Unique in the market. Patented system P073000321.5.

04 AIRCAPS. Made of high-strength and lightweight duralumin (corrosion-free). HVLP and EPA systems. Fully interchangeable. 4 choice of aircaps compatible with all available fluid nozzle sizes.

High Transfer HVLP Aircap. Designed under the highest environmental standards. Without pressure reducers in the body of the gun. We convert from a conventional system to an HVLP system, only changing the nozzle.

05 "SOFT FLOW" AIR VALVE. Smooth trigger even at high air pressure levels. No pressure drops between the 1st and 2nd stage of the trigger. Save paint by regulating air pressure with the trigger partially pulled (1st stage).

05* VÁLVULA DE AIRE "ULTRA SOFT FLOW". Innovative valve kit that reduces trigger fatigue by up to 65%. An unprecedented ergonomic innovation that significantly improves working conditions for industrial painters.

06 TRIGGER AND AXIS.
100% made of stainless steel. Relocated lever point for more comfortable tightening. Ultra-ergonomic design. Reduces fatigue.

07 AIR INLET REGULATOR.
Modern design without sharp edges, it makes easier cleaning.
Higher control precision. Ideal for quick adjustment.

08 NEEDLE GUIDE BOX.
Reinforced in stainless steel.
Very high resistance to mechanical abrasion.

09 PRODUCT REGULATOR. Sensitive adjustment of the amount of material to be applied.

10 FAN REGULATOR. High precision progressive.

11 AIR INLET. 1/4" stainless steel.

12 FILTER HOLDER WITH SWIVEL COUPLING. Facilitates access to difficult areas and reduces fatigue in continued painting sessions. (OPTIONAL)

13 DEPÓSITO DE SUCCIÓN DE 1L. fabricado en aluminio. Máximo aprovechamiento del producto. Sistema estanco de doble cierre y tapa antigoteo.

14 PRODUCT TUBE for hose alignment. Made of stainless steel. (OPTIONAL)

"METAL TO METAL" TECHNOLOGICAL VANGUARD.
Very high mechanization technology. The only spraygun on the bodywork market manufactured without any type of gasket, neither inside nor outside, in the closures between the air and the paint. Minimize the number of spare parts.

Sagola X4100 series

X 4100 series aircaps technical data GRAVITY / Versions

XT01 X series Air cap. Versatility and perfect adaptation to any type of industrial painting project. High gloss finishes, primers and high viscosity paints. Its sustained air consumption, together with the high percentages of product transfer, make SAGOLA's EPA aircaps the most balanced system on the market.

EPA PAINTED SYSTEM

Recommended application	Nozzle	Aircap	Product output flow	Fan size	Application distance	Code Spray gun
FINISHES, BASECOATS	1.30	XT01	171 g/min. (6.03 oz/min.)	250 mm. (9.84")	18 - 20 cm. (7 - 7.9")	10142004
GENERAL FINISHES, CLEARCOATS, SINGLE STAGE	1.40	XT01	175 g/min. (6.17 oz/min.)	255 mm. (10.04")		10142005
PRIMERS	1.60	XT01	209 g/min. (7.37 oz/min.)	285 mm. (11.2")		10142006

Air consumption at 2 bar (29 psi): 235 L/min. (8.30 cfm)

Recommended pressure: 1.8 - 2.2 bar (26 - 32 psi)

96 X series Air cap. The 96 aircap is a legend in industrial finishing. Its high application speed and atomization quality stand out. It is the reference finishing aircap for our most representative suction spraygun.

Maximum speed. Maximum level of brightness.

MEDIUM PRESSURE PAINTED SYSTEM

Recommended application	Nozzle	Aircap	Product output flow	Fan size	Application distance	Code Spray gun
FINISHES, BASECOATS	1.30	96	177 g/min. (6.24 oz/min.)	260 mm. (10.24")	18 - 20 cm. (7 - 7.9")	10142012
GENERAL FINISHES, CLEARCOATS, SINGLE STAGE	1.40	96	178 g/min. (6.28 oz/min.)	270 mm. (10.6")		10142001
PRIMERS AND FILLERS	1.60	96	216 g/min. (7.62 oz/min.)	310 mm. (12.2")		10142002
FILLERS	1.80	96	293 g/min. (10.34 oz/min.)	380 mm. (15")		10142003

Air consumption at 2 bar (29 psi): 250 L/min. (8.83 cfm)

Recommended pressure: 1.8 - 2.2 bar (26 - 32 psi)

Sagola X4100 series

X 4100 series aircaps technical data GRAVITY / Versions

XT03 series Air cap. Our HVLP aircap guarantees a reduction in spray mist which means an increase in transfer. Low pressure spraying provides perfect metal particle alignment.

HVLP PAINTED SYSTEM

Recommended application	Nozzle	Aircap	Product output flow	Fan size	Application distance	Code Spray gun
HIGH QUALITY FINISHES	1.30	XT03	139 g/min. (4.9 oz/min.)	260 mm. (10.24”)	12 - 15 cm. (4.72 - 5.9”)	10142007
GENERAL FINISHES	1.40	XT03	143 g/min. (5.04 oz/min.)	270 mm. (10.6”)		10142008
PRIMERS. HIGH SPEED	1.60	XT03	165 g/min. (5.82 oz/min.)	310 mm. (12.2”)		10142009
FILLERS	1.80	XT03	202 g/min. (7.13 oz/min.)	380 mm. (15”)		10142010

Air consumption at 2 bar (29 psi): 465 L/min. (16.42 cfm)

Recommended pressure: 1.8 - 2.0 bar (26 - 29 psi)

64S X series Air cap. Speed and high energy of atomization. Large surface painting with an exceptional high gloss finish. Available to be combined with high size of nozzles in work with high viscosity products. Maximum speed. Maximum level of gloss.

MEDIUM PRESSURE PAINTED SYSTEM

Recommended application	Nozzle	Aircap	Product output flow	Fan size	Application distance	Code Spray gun
GUN FILLER. HIGH VISCOSITY	2.20	64S	290 g/min. (10.23 oz/min.)	280 mm. (11.02”)	18 - 20 cm. (7 - 7.9”)	10142011

Air consumption at 2 bar (29 psi): 305 L/min. (10.77 cfm)

Recommended pressure: 2.0 - 2.5 bar (29 - 36 psi)

Sagola X4100 series

X 4100 series aircaps technical data SUCTION / Versions

96 X series Air cap. The 96 aircap is a legend in industrial finishing. Its high application speed and atomization quality stand out. It is the reference finishing aircap for our most representative suction spraygun.

Maximum speed. Maximum level of gloss.

MEDIUM PRESSURE PAINTED SYSTEM

Recommended application	Nozzle	Aircap	Product output flow	Fan size	Application distance	Code Spray gun
HIGH QUALITY FINISHES	1.40	**96**	168 g/min. (5.92 oz/min.)	235 mm. (9.3”)	18 - 20 cm. (7 - 7.9”)	**10121001**
	1.60 S	**96**	235 g/min. (8.29 oz/min.)	295 mm. (11.6”)		**10121006**
GENERAL FINISHES	1.80	**96**	228 g/min. (8.04 oz/min.)	285 mm. (11.2”)		**10121003**
PRIMERS						

Air consumption at 2 bar (29 psi): 280 L/min. (9.88 cfm)

Recommended pressure: 2.0 - 2.5 bar (29 - 36 psi)

XT01 X series Air cap. The perfect balance between finish quality and product savings. Versatility to make it compatible with products of different viscosities from fillers to enamels.

High transfer. High quality finishes.

EPA PAINTED SYSTEM

Recommended application	Nozzle	Aircap	Product output flow	Fan size	Application distance	Code Spray gun
GENERAL FINISHES	1.60 S	**XT01**	241 g/min. (8.5 oz/min.)	305 mm. (12”)	18 - 20 cm. (7 - 7.9”)	**10121007**
HIGH SPEED LARGE SURFACES	1.80	**XT01**	234 g/min. (8.25 oz/min.)	295 mm. (11.6”)		**10121005**

Air consumption at 2 bar (29 psi): 295 L/min. (10.42 cfm)

Recommended pressure: 2.0 - 3.0 bar (29 - 44 psi)

Sagola X4100 series

X 4100 series aircaps technical data PRESSURE / Versions

XT03/3030 X series Air cap. Our HVLP aircap guarantees a reduction in spray mist which means an increase in transfer. Low pressure spraying provides perfect metal particle alignment.

HVLP PAINTED SYSTEM

Recommended application	Nozzle	Aircap	Air consumption at 2 bar	Recommended pressure	Application distance	Code Spray gun
FINISHES. BASECOATS. DYES	1.00	XT03	460 L/min. (16.24 cfm)	0.5 - 1.0 bar (7 - 14.5 psi)	12 - 15 cm. (4.7 - 5.9")	10152406
GENERAL FINISHES PRIMERS	1.20	XT03	460 L/min. (16.24 cfm)	1,0 - 1.5 bar (14.5 - 22 psi)		10152407
PRIMERS AND BASECOATS	1.40	3030	514 L/min. (18.15 cfm)	2.0 - 2.5 bar (29 - 36 psi)		10152412

XT01 B/Super VIT X series Aircap. Versatility and perfect adaptation to any type of industrial painting project. High gloss finishes, primers and high viscosity paints. Its sustained air consumption, together with the high percentages of product transfer, make SAGOLA's EPA aircaps the most balanced system on the market.

EPA PAINTED SYSTEM

Recommended application	Nozzle	Aircap	Air consumption at 2 bar	Recommended pressure	Application distance	Code Spray gun
METALLICS. CLEARCOATS	1.00	XT01 B	295 L/min. (10.42 cfm)	0.5 - 1.0 bar (7 - 14.5 psi)	18 - 20 cm. (7 - 7.9")	10152408
CLEARCOAT AND FILLERS	1.20	XT01 B	295 L/min. (10.42 cfm)	1.0 - 1.5 bar (14.5 - 22 psi)		10152409
PRIMERS AND FILLERS	1.40	XT01 B	295 L/min. (10.42 cfm)	2.0 - 2.5 bar (29 - 36 psi)		10152410
METALLICS. CLEARCOATS	1.20	Super VIT	380 L/min. (13.42 cfm)	1.0 - 1.5 bar (14.5 - 22 psi)		10152414
CLEARCOAT AND FILLERS	1.40	Super VIT	380 L/min. (13.42 cfm)	2.0 - 2.5 bar (29 - 36 psi)		10152416

777 / 765 X series Air cap. Speed and high energy of atomization. Large surface painting with an exceptional high gloss finish. Available to be combined with high size of nozzles in work with high viscosity products. Maximum speed. Maximum level of gloss.

MEDIUM PRESSURE PAINTED SYSTEM

Recommended application	Nozzle	Aircap	Air consumption at 2 bar	Recommended pressure	Application distance	Code Spray gun
FINISHES. HIGH QUALITY	1.00	777	345 L/min. (12.18 cfm)	0.8 - 1.5 bar (11.6 - 22 psi)	18 - 20 cm. (7 - 7.9")	10152404
FINISHES. HIGH GLOSS	1.20	777	345 L/min. (12.18 cfm)	0.8 - 1.5 bar (11.6 - 22 psi)		10152405
FINISHES AND PRIMERS	1.20	765	315 L/min. (11.12 cfm)	0.5 - 1.0 bar (7 - 14.5 psi)		10152402
PRIMERS AND BASECOATS	1.40	765	315 L/min. (11.12 cfm)	1.0 - 1.5 bar (14.5 - 22 psi)		10152403

Both the **product contribution** and the **fan size** in the pressure guns are directly related to the product pressure set by the user, the product viscosity and the characteristics of the hose. Therefore, a reference value cannot be established.

Sagola X4100 series

Sagola X4100 series gravity spare parts

SAGOLA is synonymous with quality and service. For this reason, SAGOLA provides a comprehensive spare parts and service guarantee, ensuring the proper maintenance of all its products, even those sold more than 10 years ago.
To ensure the best possible results and a high-quality finish, the spray gun must be thoroughly cleaned after each use and periodically checked for damaged or worn components. Any damaged or worn parts must be replaced.

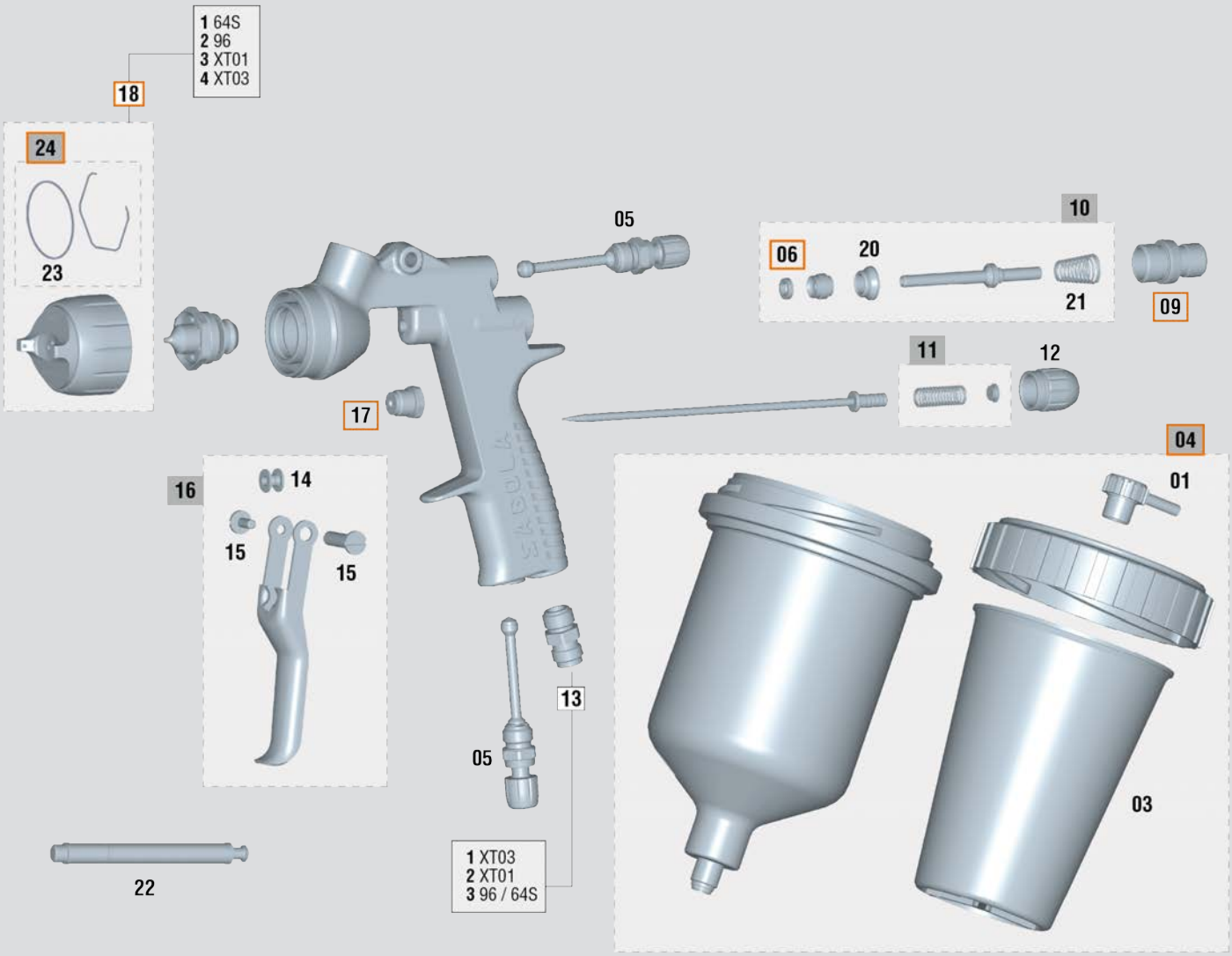

1 (Ø 0.80)	**7** (Ø 1.80)
2 (Ø 1.00)	**8** (Ø 2.00)
3 (Ø 1.20)	**9** (Ø 2.20)
4 (Ø 1.30)	**10** (Ø 2.50)
5 (Ø 1.40)	**11** (Ø 2.80)
6 (Ø 1.60)	

ACERO INOXIDABLE
STAINLESS STEEL

12 (Ø 1.80)
13 (Ø 1.40)
14 (Ø 1.50)
15 (Ø 1.80)
16 (Ø 2.20)
17 (Ø 2.80)

CARBURO TUNGSTENO
TUNGSTEN CARBIDE

19

Latest updated version of the exploded view Sagola X4100 series Gravity

Sagola X4100 series

We call critical parts those that can stop the work of a spraygun: wear parts, gaskets, packings,... Sagola spray guns design offers **ONLY 6 CRITICAL PARTS** ( ). Only 6 references in store to provide a 100% effective after-sales service.

SPARE PARTS — X4100 Series Gravity

No.	Code	Description
01	55712157	Anti-drip plug raccord
02	57111508	Gravity cup top cover 0.65 L
03	56418017	Product filter (10 units)
04	**56418084**	**Gravity cup 0.65 L**
05	56415252	Flow and fan regulator
06	**56418494**	**Air valve washer (6 units)**
09	**56411623**	**Product needle guide box**
10	56418669	Air valve Kit
11	56418716	Spring + stop
12	57810340	Product regulator wheel
13/1	55711591	Raccord 1/4" x19 M - 1/4" x19 M (Chicler)
13/2	55711562	Raccord 1/4" x19 M - 1/4" x19 M (Chicler)
13/3	55710361	Raccord 1/4" x19 M - 1/4" x19 M (Chicler)
14	51910607	Trigger guide bushing
15	56418439	Kit screw + trigger shaft
16	56418443	Trigger Kit
17	**56411616**	**Complete packing nut Kit**
18/1	**56418575**	**Air cap 64S**
18/2	**56418573**	**Air cap 96**
18/3	**56418565**	**Air cap XT01**
18/4	**56418566**	**Air cap XT03**

SPARE PARTS — X4100 Series Gravity

No.	Code	Description
19/1	**10011251**	**Kit nozzle + needle 0.80 - 41 series**
19/2	**10011252**	**Kit nozzle + needle 1.00 - 41 series**
19/3	**10011253**	**Kit nozzle + needle 1.20 - 41 series**
19/4	**10011121**	**Kit nozzle + needle 1.30 - 41 series**
19/5	**10011122**	**Kit nozzle + needle 1.40 - 41 series**
19/6	**10011123**	**Kit nozzle + needle 1.60 - 41 series**
19/7	**10011124**	**Kit nozzle + needle 1.80 - 41 series**
19/8	**10011125**	**Kit nozzle + needle 2.00 - 41 series**
19/9	**10011126**	**Kit nozzle + needle 2.20 - 41 series**
19/10	**10011127**	**Kit nozzle + needle 2.50 - 41 series**
19/11	**10011128**	**Kit nozzle + needle 2.80 - 41 series**
19/12	**10010129**	**Kit nozzle + needle 1.20 C.T. - 41 series**
19/13	**10010130**	**Kit nozzle + needle 1.40 C.T. - 41 series**
19/14	**10010131**	**Kit nozzle + needle 1.50 C.T. - 41 series**
19/15	**10010132**	**Kit nozzle + needle 1.80 C.T. - 41 series**
19/16	**10010133**	**Kit nozzle + needle 2.20 C.T. - 41 series**
19/17	**10010134**	**Kit nozzle + needle 2.80 C.T. - 41 series**
20	54110012	Air valve seating
21	54710312	Conical spring 10.6 x 6.7 x 29 x 1.05
22	50210214	Air valve assembly wrench
23	56418681	Air nozzle gasket kit
24	56418678	Air nozzle gasket (5 pcs)

This exploded view is not the material list of the spraygun

Clean the spraygun correctly. No metal tools. Only brushes. Lubricate the moving parts of the gun after each cleaning.

Cleaning kit Brush and sticks for optimum cleaning outside and inside the gun.

Code 40000086

Lubricant grease Natural grease. High consistency, even under extreme temperatures. Long lasting, it doesn't lose properties over the time. 100 ml. can.

Code 56418589

(see page 115)

RC1
Air Flow Regulator

Very lightweight, made of aluminium. Ideal for high-transfer spray guns. Tool-free assembly in seconds with a tight, secure seal.

Ref. 56418020

Sagola X4100 series

Sagola X4100 series suction spare parts

SAGOLA is synonymous with quality and service. For this reason, SAGOLA provides a comprehensive spare parts and service guarantee, ensuring the proper maintenance of all its products, even those sold more than 10 years ago.
To ensure the best possible results and a high-quality finish, the spray gun must be thoroughly cleaned after each use and periodically checked for damaged or worn components. Any damaged or worn parts must be replaced.

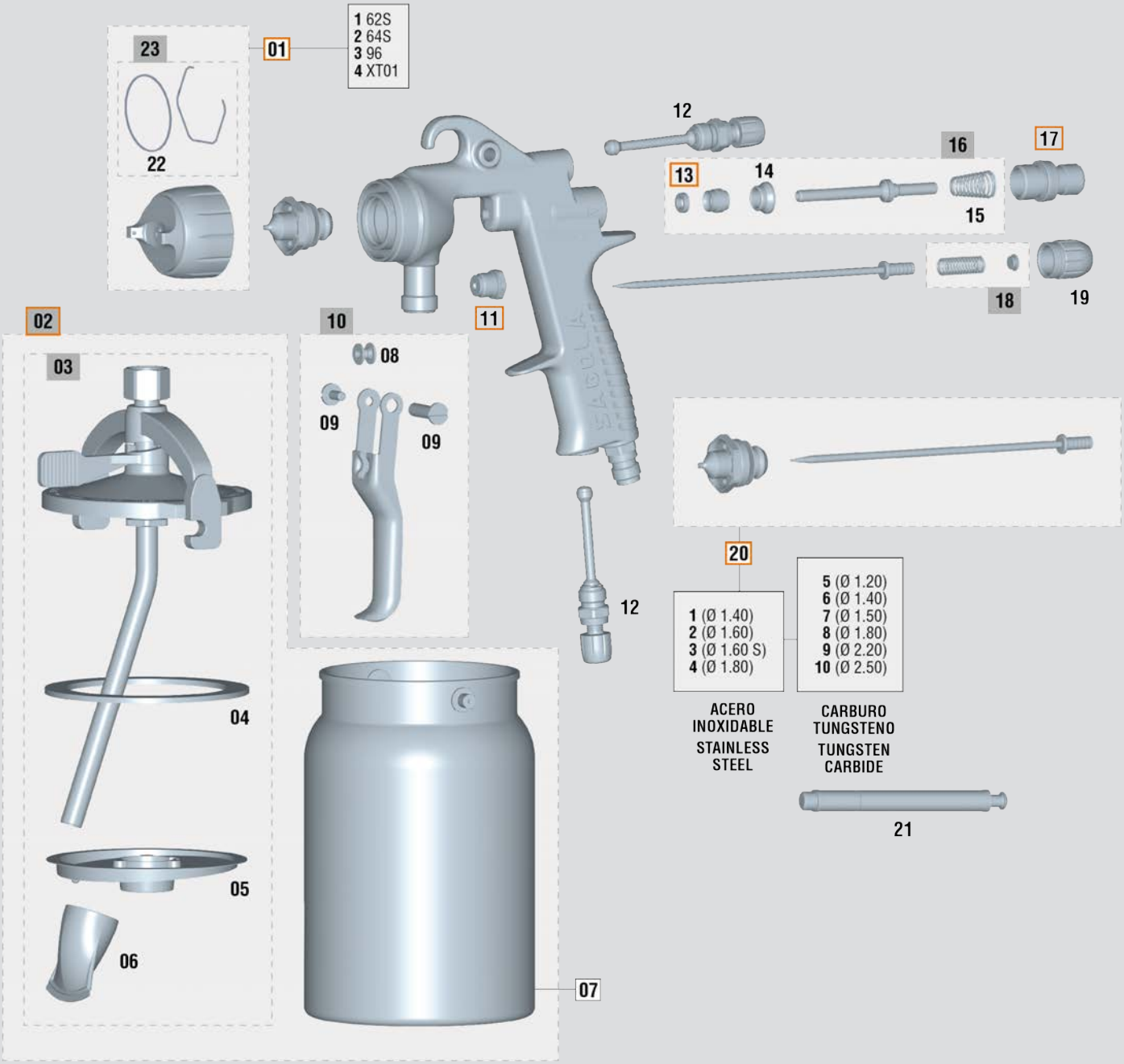

Latest updated version of the exploded view Sagola X4100 series Suction

Sagola X4100 series

We call critical parts those that can stop the work of a spraygun: wear parts, gaskets, packings,... Sagola spray guns design offers **ONLY 6 CRITICAL PARTS** ( ). Only 6 references in store to provide a 100% effective after-sales service.

SPARE PARTS — X4100 Series Suction

No.	Code	Description
01/1	**56418574**	**Air cap 62S**
01/2	**56418575**	**Air cap 64S**
01/3	**56418573**	**Air cap 96**
01/4	**56418565**	**Air cap XT01**
02	**56418074**	**Suction deposit Kit 1L**
03	56416402	Suction deposit flange lid 1L
04	56418509	Deposit flange sealing washer (5 units)
05	56418013	Anti-drip lid (5 units)
06	56418014	Product filter (10 units)
07	56412320	Suction deposit 1L
08	51910607	Trigger guide bushing
09	56418439	Kit screw + trigger shaft
10	56418443	Trigger Kit
11	**56411616**	**Complete packing nut Kit**
12	56415252	Flow and fan regulator
13	**56418494**	**Air valve washer (6 units)**
14	54110012	Air valve seating
15	54710312	Conical spring 10.6 x 6.7 x 29 x 1.05

SPARE PARTS — X4100 Series Suction

No.	Code	Description
16	56418669	Air valve Kit
17	**56411623**	**Product needle guide box**
18	56410044	Spring + stop
19	57810340	Product regulator wheel
20/1	**10011122**	**Kit nozzle + needle 1.40 - 41 series**
20/2	**10011123**	**Kit nozzle + needle 1.60 - 41 series**
20/3	**10011155**	**Kit nozzle + needle 1.60S - 41 series**
20/4	**10011124**	**Kit nozzle + needle 1.80 - 41 series**
20/5	**10010129**	**Kit nozzle + needle 1.20 C.T. - 41 series**
20/6	**1001013 0**	**Kit nozzle + needle 1.40 C.T. - 41 series**
20/7	**10010131**	**Kit nozzle + needle 1.50 C.T. - 41 series**
20/8	**10010132**	**Kit nozzle + needle 1.80 C.T. - 41 series**
20/9	**10010133**	**Kit nozzle + needle 2.20 C.T. - 41 series**
20/10	**10010134**	**Kit nozzle + needle 2.50 C.T. - 41 series**
21	50210214	Air valve assembly wrench
22	56418681	Air nozzle gasket kit
23	56418678	Air nozzle gasket (5 pcs)

This exploded view is not the material list of the spraygun

Clean the spraygun correctly. No metal tools. Only brushes. Lubricate the moving parts of the gun after each cleaning.

Cleaning kit Brush and sticks for optimum cleaning outside and inside the gun.

Code 40000086

Lubricant grease Natural grease. High consistency, even under extreme temperatures. Long lasting, it doesn't lose properties over the time. 100 ml. can.

Code 56418589

(see page 115)

RC1
Air Flow Regulator

Very lightweight, made of aluminium. Ideal for high-transfer spray guns. Tool-free assembly in seconds with a tight, secure seal.

Ref. 56418020

Sagola X4100 series

Sagola X4100 series pressure spare parts

SAGOLA is synonymous with quality and service. For this reason, SAGOLA provides a comprehensive spare parts and service guarantee, ensuring the proper maintenance of all its products, even those sold more than 10 years ago.
To ensure the best possible results and a high-quality finish, the spray gun must be thoroughly cleaned after each use and periodically checked for damaged or worn components. Any damaged or worn parts must be replaced.

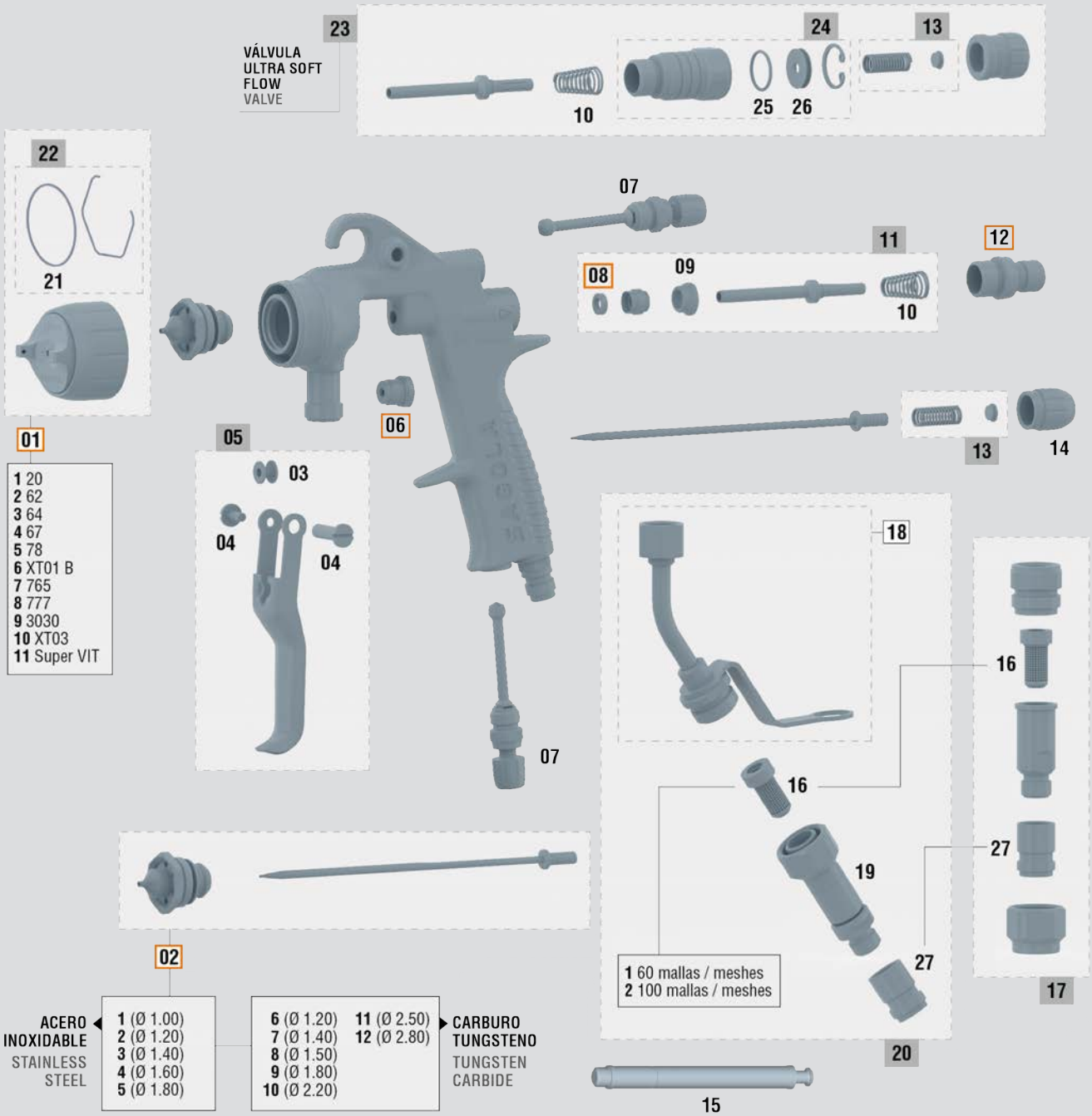

Latest updated version of the exploded view Sagola X4100 series Pressure

Sagola X4100 series

We call critical parts those that can stop the work of a spraygun: wear parts, gaskets, packings,... Sagola spray guns design offers **ONLY 5 CRITICAL PARTS** ( ). Only 5 references in store to provide a 100% effective after-sales service.

DESPIECE — X4100 Series Pressure

No.	Code	Description
01/1	56418569	Air cap 20
01/2	56418567	Air cap 62
01/3	56418570	Air cap 64
01/4	56418568	Air cap 67
01/5	56418590	Air cap 78
01/6	56418564	Air cap XT01 B
01/7	56418571	Air cap 765
01/8	56418576	Air cap 777
01/9	56418572	Air cap 3030
01/10	56418566	Air cap XT03
01/11	56418702	Air cap Super VIT
02/1	10011252	Kit nozzle + needle 1.00 - 41 series
02/2	10011253	Kit nozzle + needle 1.20 - 41 series
02/3	10011122	Kit nozzle + needle 1.40 - 41 series
02/4	10011123	Kit nozzle + needle 1.60 - 41 series
02/5	10011124	Kit nozzle + needle 1.80 - 41 series
02/6	10010129	Kit nozzle + needle 1.20 C.T. - 41 series
02/7	10010130	Kit nozzle + needle 1.40 C.T. - 41 series
02/8	10010131	Kit nozzle + needle 1.50 C.T. - 41 series
02/9	10010132	Kit nozzle + needle 1.80 C.T. - 41 series
02/10	10010133	Kit nozzle + needle 2.20 C.T. - 41 series
02/11	10010135	Kit nozzle + needle 2.50 C.T. - 41 series
02/12	10010134	Kit nozzle + needle 2.80 C.T. - 41 series

This exploded view is not the material list of the spraygun

DESPIECE — X4100 Series Pressure

No.	Code	Description
03	51910607	Trigger guide bushing
04	56418439	Kit screw + trigger shaft
05	56418443	Trigger Kit
06	**56411616**	**Complete packing nut Kit**
07	56415252	Flow and fan regulator
08	**56418494**	**Air valve washer (6 units)**
09	54110012	Air valve seating
10	54710312	Conical spring 10.6 x 6.7 x 29 x 1.05
11	56418669	Air valve Kit
12	**56411623**	**Product needle guide box**
13	56410044	Spring + stop
14	57810340	Product regulator wheel
15	50210214	Air valve assembly wrench
16/1	56418054	Product filter 60 mesh (10 pcs.)
16/2	56418053	Product filter 100 mesh (10 pcs.)
17	56418057	Filter holder kit (1/4”-3/8”) + mesh filters
18	56418670	Product tube
19	56410110	BSP 1/4” M - BSP 1/2” F Swivel coupling
20	56418671	Kit tube + Swivel coupling
21	56418681	Air nozzle gasket kit
22	56418678	Air nozzle gasket (5 pcs)
23	56418684	Ultrasoft air valve kit
24	56417419	Ultrasoft air valve subbody
25	54250818	O-ring Ø15 x 1,5 FFKM
26	52710061	Ultrasoft valve body piston
27	55710367	Adapter coupling

Clean the spraygun correctly. No metal tools. Only brushes. Lubricate the moving parts of the gun after each cleaning.

Cleaning kit Brush and sticks for optimum cleaning outside and inside the gun.

Code 40000086

Lubricant grease Natural grease. High consistency, even under extreme temperatures. Long lasting, it doesn’t lose properties over the time. 100 ml. can.

Code 56418589

(see pages 90 and 98)

Pressure pots and pneumatic pump

Pumping equipment with maximum robustness and minimal maintenance. Wide range available.

Sagola 3300 GTO Suction / Pressure

Ideal for painting large surfaces, machinery and industrial vehicles

Continuous working days

Versatility. Industrial finishes

With the 3300 GTO pressure spraygun, SAGOLA offers a very high level product with an excellent quality / price ratio. This suction spraygun is characterized by its versatility.

High performance spraygun. High speed application for painting large surfaces. Offers large fan sizes.

Ideal for the application of enamels, varnishes, primers and basecoats.

High-end aluminum aircaps. Nozzles and needles made of stainless steel.

M2M™
Metal to Metal Technology

TECHNICAL DATA		3300 GTO SUCTION / PRESSURE
Weight with cup: (suction version)	869 grams	1.92 lbs
Weight with deposit: (suction/pressure version)	474 grams	1.04 lbs
Dimensions with cup: (suction version)	18.7 X 10.6 X 28.7 cm.	7.36 x 4.17 x 11.31 “
Dimensions without cup: (suction/pressure version)	17.8 X 1.9 X 17.5 cm.	7.01 x 0.75 x 6.91 “
Air inlet connection	BSP 1/4” Male	
Cup / Deposit	Suction: 1,000 ml. capacity (34 fl oz.) Deposit with anti-drip system Pressure: Product input through pressure pot or pneumatic pump	
Product filter	Nylon Mesh (Suction)	
Recommended working pressure (suction version)	2 - 3 bar (29 - 43.5 psi)	
Average sound pressure level	80 dB	
Materials in contact with the product	Anodized aluminum, chromed aluminum, POM, INOX, Teflon and Nylon	

Sagola 3300 GTO Suction / Pressure

3300 EPA

GTO HVLP

Body

Forged and anodised aluminium body. Lightweight spray gun with high durability.

Value for money

High manufacturing quality and performance at a competitive cost.

Air caps

Aluminium air caps. Available in EPA and HVLP. Very low air consumption.

Deposit

High-capacity aluminium deposit (1L).

Sagola 3300 GTO Suction / Pressure

Key new features

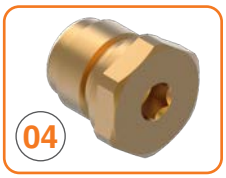

01 SUPER LIGHT. -METAL TO METAL- TECHNOLOGY.
No sealing joints between components.

02 High strength FORGED ALUMINUM BODY.
REGISTER DC 924667-0004 DESIGN REGISTER.

03 ALUMINUM AIRCAPS.
GTO HVLP / 3300 EPA
Ultra-fine atomization and larger fans. Designed for the best response at any pressure. With mechanized aerodynamic caps which eliminate turbulence and reverse painting.

04 One single piece AUTOMATIC PAINT PACKING GLAND.
Unique in the market. It avoids manipulation and breakage of the glands and makes it easier to remove for thorough cleaning of the paint area.

05 ERGONOMIC TRIGGER.
Made of stainless steel.
It reduces fatigue.

06 NOZZLE AND NEEDLE.
Made of stainless steel.

07 "SOFT FLOW" AIR VALVE.
Smooth trigger even at high air pressure levels.
No pressure drops between the 1st and 2nd stage of the trigger. Save paint by regulating air pressure with the trigger partially pulled (1st stage).

Pressure version

08 HIGH-PRECISION AIR FLOW REGULATOR.
Modern edge-free design for easier cleaning. Greater adjustment accuracy.
Prevents unintentional misadjustments.

09 AIR FLOW REGULATOR with PRESSURE GAUGE. It maintains the working pressure according to the parameters of Emissions regulations. (Green scale). Code 40000335

10 1L SUCTION DEPOSIT
Made of aluminium. Maximum material utilisation. Double-seal airtight system with anti-drip lid.

Suction version

Sagola 3300 GTO Suction / Pressure

3300 GTO aircaps technical data / Versions

SUCTION VERSION

3300 EPA Air cap. Versatility and perfect adaptation to any type of industrial painting project. High-gloss finishes, primers or high-viscosity coatings. Its controlled air consumption combined with high transfer efficiency makes SAGOLA EPA air caps the most balanced system on the market.

EPA PAINTED SYSTEM

Recommended application	Nozzle	Aircap	Product output flow	Fan size	Application distance	Code Spray gun
HIGH-QUALITY FINISHES	1.40	3300 EPA	179 g/min. (6.3 oz/min.)	245 mm. (9.6”)	18 - 20 cm. (7 - 7.9”)	10120910
GENERAL FINISHES	1.60	3300 EPA	156 g/min. (5.5 oz/min.)	225 mm. (8.9”)		10120911
FINISHES AND PRIMERS	1.80	3300 EPA	184 g/min. (6.5 oz/min.)	245 mm. (9.6”)		10120912

Air consumption at 2 bar (29 psi): 250 L/min. (8.8 cfm)

Recommended pressure: 2.0 - 2.5 bar (29 - 36 psi)

PRESSURE VERSION

3300 EPA Air cap. Suitable for a wide range of industrial coatings, including high-gloss finishes, primers and high-viscosity materials. Controlled air consumption and high transfer efficiency ensure a well-balanced and efficient application system.

EPA PAINTED SYSTEM

Recommended application	Nozzle	Aircap	Air consumption at 2 bar	Recommended pressure	Application distance	Code Spray gun
HIGH-QUALITY FINISHES	1.00	3300 EPA	250 L/min. (8.8 cfm)	1,5 - 2,0 bar (21.7 - 29 psi)	18 - 20 cm. (7 - 7,9”)	10152214
GENERAL FINISHES AND PRIMERS	1.20	3300 EPA	250 L/min. (8.8 cfm)	1,5 - 2,0 bar (21.7 - 29 psi)		10152215
PRIMERS	1.40	3300 EPA	250 L/min. (8.8 cfm)	1,5 - 2,0 bar (21.7 - 29 psi)		10152216

GTO HVLP Air cap. Sagola HVLP system. Large fan pattern. Low pressure at the air cap allows closer spraying to the surface, increasing transfer efficiency. Smooth and uniform finish to reduce sanding time and consumable use. Reduced overspray.

HVLP PAINTED SYSTEM

Recommended application	Nozzle	Aircap	Air consumption at 2 bar	Recommended pressure	Application distance	Code Spray gun
FINISHES. BASECOATS. STAINS	1.00	GTO HVLP	360 L/min. (12,71 cfm)	1,8 - 2,0 bar (26,1 - 29 psi)	18 - 20 cm. (7 - 7,9”)	10152210
GENERAL FINISHES AND PRIMERS	1.20	GTO HVLP	360 L/min. (12,71 cfm)	1,8 - 2,0 bar (26,1 - 29 psi)		10152211
PRIMERS AND SURFACERS	1.40	GTO HVLP	360 L/min. (12,71 cfm)	1,8 - 2,0 bar (26,1 - 29 psi)		10152212

Both the **product contribution** and the **fan size** in the pressure guns are directly related to the product pressure set by the user, the product viscosity and the characteristics of the hose. Therefore, a reference value cannot be established.

Sagola 3300 GTO Suction

Sagola 3300 GTO Suction spare parts

SAGOLA is synonymous with quality and service. For this reason, SAGOLA provides a comprehensive spare parts and service guarantee, ensuring the proper maintenance of all its products, even those sold more than 10 years ago.
To ensure the best possible results and a high-quality finish, the spray gun must be thoroughly cleaned after each use and periodically checked for damaged or worn components. Any damaged or worn parts must be replaced.

Latest updated version of the exploded view Sagola 3300 GTO Suction

Sagola 3300 GTO Suction

We call critical parts those that can stop the work of a spraygun: wear parts, gaskets, packings,... Sagola spray guns design offers **ONLY 6 CRITICAL PARTS** ( ). Only 6 references in store to provide a 100% effective after-sales service.

SPARE PARTS — 3300 GTO Suction

No.	Code	Description
01	56418429	Kit screw + trigger shaft
02	56410072	Spring + stop
03	57810342	Product regulator wheel
04	**56418701**	**Guide box + spring**
05	51910608	Trigger guide bushing
07	56415254	Air regulator
08	**57212211**	**Packing nut Kit**
09	**56418494**	**Air valve gasket (6 pcs.)**
10/1	**10011181**	**Kit nozzle + needle 1.40 Serie 3300**
10/2	**10011182**	**Kit nozzle + needle 1.60 Serie 3300**
10/3	**10011183**	**Kit nozzle + needle 1.60 Serie 3300**
11	56418637	Trigger Kit

SPARE PARTS — 3300 GTO Suction

No.	Code	Description
12/1	**56418645**	**Air cap 3300 EPA**
12/2	**56418658**	**Air cap GTO HVLP**
13	56412320	Suction deposit Kit 1L
14	56416402	Suction deposit flange lid 1L
15	56418014	Product filter (10 units)
16	**56418074**	**Suction deposit Kit 1L**
17	56418509	Deposit flange sealing washer (5 units)
18	56418013	Anti-drip lid (5 units)
19	56418669	Air valve Kit
20	56418682	Air nozzle gasket kit (5 units)
21	56418679	Air nozzle gasket kit
22	54110012	Air valve seating

This exploded view is not the material list of the spraygun

Clean the spraygun correctly. No metal tools. Only brushes. Lubricate the moving parts of the gun after each cleaning.

Cleaning kit Brush and sticks for optimum cleaning outside and inside the gun.

Code 40000086

Lubricant grease Natural grease. High consistency, even under extreme temperatures. Long lasting, it doesn't lose properties over the time. 100 ml. can.

Code 56418589

(see page 115)

RC1
Air Flow Regulator

Very lightweight, made of aluminium. Ideal for high-transfer spray guns. Tool-free assembly in seconds with a tight, secure seal.

Ref. 56418020

Sagola 3300 GTO Pressure

Sagola 3300 GTO Pressure spare parts

SAGOLA is synonymous with quality and service. For this reason, SAGOLA provides a comprehensive spare parts and service guarantee, ensuring the proper maintenance of all its products, even those sold more than 10 years ago.
To ensure the best possible results and a high-quality finish, the spray gun must be thoroughly cleaned after each use and periodically checked for damaged or worn components. Any damaged or worn parts must be replaced.

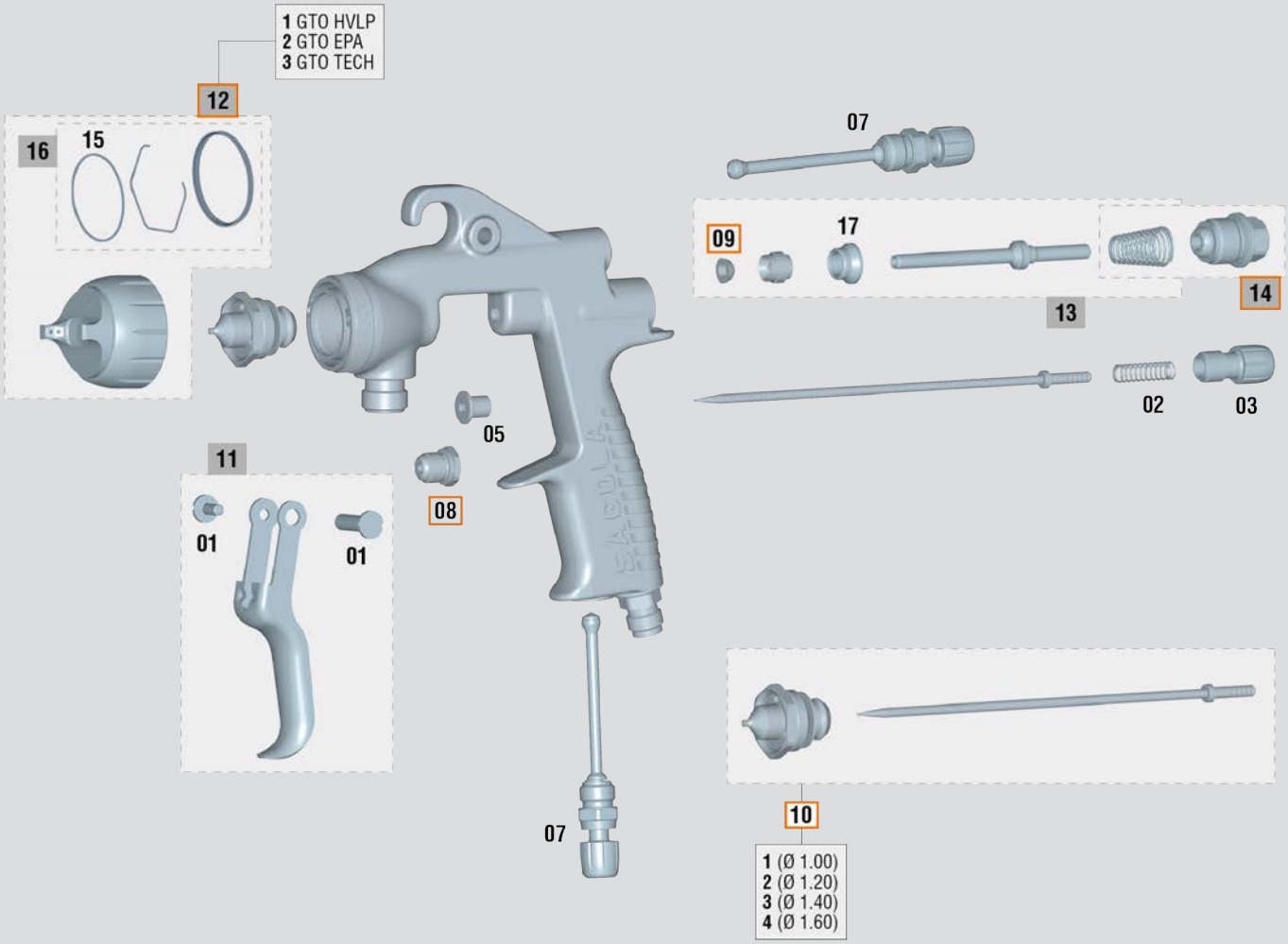

Latest updated version of the exploded view Sagola 3300 GTO Pressure

Sagola 3300 GTO Pressure

We call critical parts those that can stop the work of a spraygun: wear parts, gaskets, packings,... Sagola spray guns design offers **ONLY 5 CRITICAL PARTS** ( ). Only 5 references in store to provide a 100% effective after-sales service.

SPARE PARTS — 3300 GTO Pressure

No.	Code	Description
01	56418429	Kit screw + trigger shaft
02	56410072	Spring + stop
03	57810342	Product regulator wheel
05	51910608	Trigger guide bushing
07	56415254	Air regulator
08	**57212211**	**Packing nut Kit**
09	**56418494**	**Air valve gasket (6 pcs.)**
10/1	**10011187**	**Kit nozzle + needle 1.00 Serie 3300**
10/2	**10011180**	**Kit nozzle + needle 1.20 Serie 3300**
10/3	**10011181**	**Kit nozzle + needle 1.40 Serie 3300**
10/4	**10011182**	**Kit nozzle + needle 1.60 Serie 3300**

SPARE PARTS — 3300 GTO Pressure

No.	Code	Description
11	56418637	Trigger Kit
12/1	**56418477**	**Air cap GTO HVLP**
12/2	**56418645**	**Air cap GTO EPA**
12/3	**56418551**	**Air cap GTO TECH**
13	56418669	“Soft flow” air valve kit
14	**56418701**	**Guide box + spring**
15	56418682	Air nozzle gasket (5 units)
16	56418679	Air nozzle gasket kit
17	54110012	Air valve seating

This exploded view is not the material list of the spraygun

Clean the spraygun correctly. No metal tools. Only brushes. Lubricate the moving parts of the gun after each cleaning.

Cleaning kit Brush and sticks for optimum cleaning outside and inside the gun.

Code 40000086

Lubricant grease Natural grease. High consistency, even under extreme temperatures. Long lasting, it doesn’t lose properties over the time. 100 ml. can.

Code 56418589

(see pages 90 and 98)

Pressure pots and pneumatic pump

Pumping equipment with maximum robustness and minimal maintenance. Wide range available.

Sagola Mini Xtreme Pressure

High resistance forged and anodized aluminum body.
Ideal for painting chassis and structures.

Perfect ERGONOMICS: Due to its size it is the perfect spray gun for retricted access areas which require a lot of wrist movement.

mini XTREME

Unlimited possibilities in 347g

Its compact size makes this gun the perfect choice for working in hard to reach areas. Also suitable for spot repair work or lettering. It reduces mist, saves paint and perfectly defines the work zone.

Mini EPA

Mini VIT

Mini HVLP

TECHNICAL DATA		MINI XTREME PRESSURE
Weight	347 grams	0.77 lbs
Dimensions	15.8 x 16.5 cm. (width of handle 1.8 cm.)	6.22 x 6.5 “ (width of handle 0.71”)
Air inlet connection	BSP 1/4” Male	
Product intlet connection	BSP 3/8” Male	
Deposit	Product input through pressure pot or pneumatic pump	
Recommended working pressure	2 - 3 bar (29 - 43.5 psi)	
Average sound pressure level	80 dB	
Materials in contact with the product	Anodized aluminum, POM, Stainless steel, Teflon and Nylon	

Sagola Mini Xtreme Pressure

Key new features

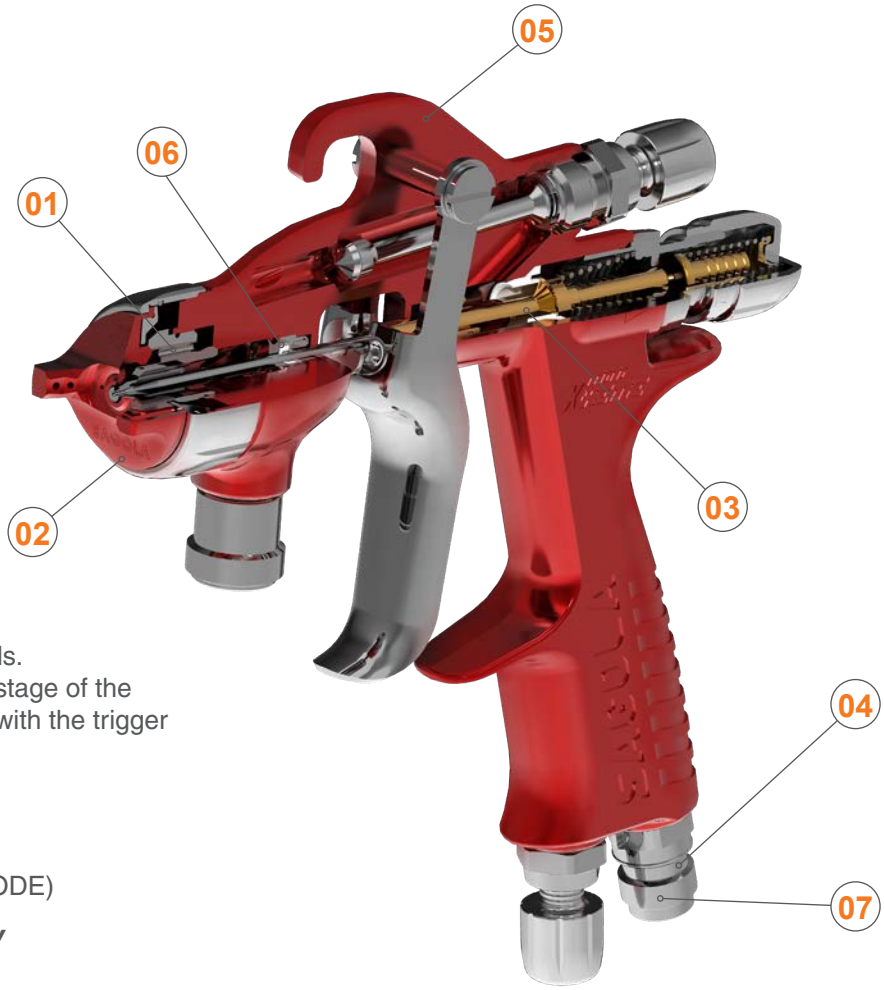

01 DV NOZZLES. Made of stainless steel. Maximum application speed.

02 AIRCAPS Made of duralumin. Highly resistant and light. EPA and HVLP Systems. Totally interchangeable. 3 aircaps to choose. Each compatible with all available fluid nozzle sizes. High transfer HVLP aircap. Designed under the highest environmental standards. Without pressure reducers in the body of the gun We convert from a conventional system to an HVLP system, only changing the aircap. Two high transfer EPA aircaps.

03 "SOFT FLOW" AIR VALVE.
Smooth trigger even at high air pressure levels. No pressure drops between the 1st and 2nd stage of the trigger. Save paint by regulating air pressure with the trigger partially pulled (1st stage).

04 IDENTIFYING RINGS OF COLOURS.
Perfect for differentiation spray guns when there are multiple painters. (COLOR CODE)

05 ANODIZED FORGED ALUMINUM BODY
High strength in just 347 grams.

06 One single piece AUTOMATIC PRODUCT PACKING GLAND.
Made of stainless steel. It avoids manipulation and breakage of the glands and makes easier to remove it for a through cleaning of the paint part.

07 AIR INLET REGULATOR. Modern design without sharp edges, it makes easier cleaning. Higher regulation precision. Ideal for quick adjustment.

"METAL TO METAL" TECHNOLOGY.
The high-end mechanisation technology used makes it the only spray gun in the bodywork market that is manufactured without any kind of gasket, interior or exterior, at the closures between the air and paint. Minimum number of spare parts.

IDENTIFYING RINGS OF COLOURS

AIR FLOW REGULATOR

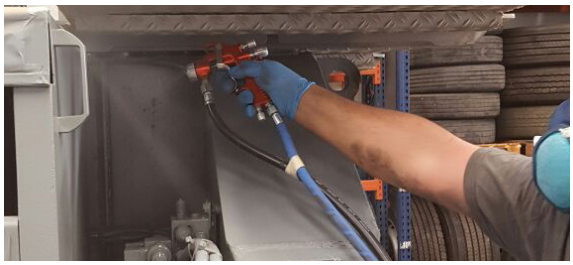

The **RC1 pressure regulator** is the perfect ally for the Mini Xtreme spraygun. Hand tighten, no wrench needed. Perfect closing. It is not necessary to teflon the air inlet of the gun. (see page 115)

Sagola Mini Xtreme Pressure

Mini Xtreme aircaps technical data / Versions

Mini HVLP Air cap. The use of the Mini HVLP aircap implies a drastic reduction in spray mist and a consequent increase in product transfer. The HVLP aircaps, which work at a lower spray pressure, facilitate the application of metallic colors, obtaining a better alignment of the metallic particle.

HVLP PAINTED SYSTEM

Recommended application	Recommended nozzle	Aircap	Air consumption at 2 bar	Recommended pressure	Application distance	Code Spray gun
SPECIAL ENAMELS	0.80	Mini HVLP	335 L/min. (11.83 cfm)	2.0 - 3.0 bar (29 - 43.5 psi)	12 - 15 cm. (4.72 - 5.9”)	10111901
FINISHES. LOW MIST	1.00	Mini HVLP	335 L/min. (11.83 cfm)	2.0 - 3.0 bar (29 - 43.5 psi)		10111902
FINISHES AND PRIMERS. MAXIMUM SPEED	1.20	Mini HVLP	335 L/min. (11.83 cfm)	2.0 - 3.0 bar (29 - 43.5 psi)		10111903

Mini EPA / Mini VIT Aircap. The EPA aircap of the Sagola Mini Xtreme pressure nozzles are characterized by their versatility and their adaptation to any type of industrial painting project. From high gloss finishes to primers and high viscosity paints. Their sustained air consumption, together with the high percentages of product transfer, make SAGOLA’s EPA aircaps the most balanced system on the market.

EPA PAINTED SYSTEM

Recommended application	Recommended nozzle	Aircap	Air consumption at 2 bar	Recommended pressure	Application distance	Code Spray gun
SHADING. DYES, BASECOATS	0.80	Mini EPA	190 L/min. (6.71 cfm)	2.0 - 3.0 bar (29 - 43.5 psi)	18 - 20 cm. (7 - 7.9”)	10111904
FINISHES. HIGH QUALITY	1.00	Mini EPA	190 L/min. (6.71 cfm)	2.0 - 3.0 bar (29 - 43.5 psi)		10111905
FINISHES. HIGH SPEED	1.20	Mini EPA	190 L/min. (6.71 cfm)	2.0 - 3.0 bar (29 - 43.5 psi)		10111906
DYES AND METALLICS	0.80	Mini VIT	375 L/min. (13.24 cfm)	2.0 - 3.0 bar (29 - 43.5 psi)	18 - 20 cm. (7 - 7.9”)	10111907
FINISHES. HIGHEST QUALITY	1.00	Mini VIT	375 L/min. (13.24 cfm)	2.0 - 3.0 bar (29 - 43.5 psi)		10111908
PRIMERS, BASECOATS	1.20	Mini VIT	375 L/min. (13.24 cfm)	2.0 - 3.0 bar (29 - 43.5 psi)		10111909

Both the **product contribution** and the **fan size** in the pressure guns are directly related to the product pressure set by the user, the product viscosity and the characteristics of the hose. Therefore, a reference value cannot be established.

Sagola Mini Xtreme Pressure

Sagola Mini Xtreme Pressure spare parts

SAGOLA is synonymous with quality and service. For this reason, SAGOLA provides a comprehensive spare parts and service guarantee, ensuring the proper maintenance of all its products, even those sold more than 10 years ago.
To ensure the best possible results and a high-quality finish, the spray gun must be thoroughly cleaned after each use and periodically checked for damaged or worn components. Any damaged or worn parts must be replaced.

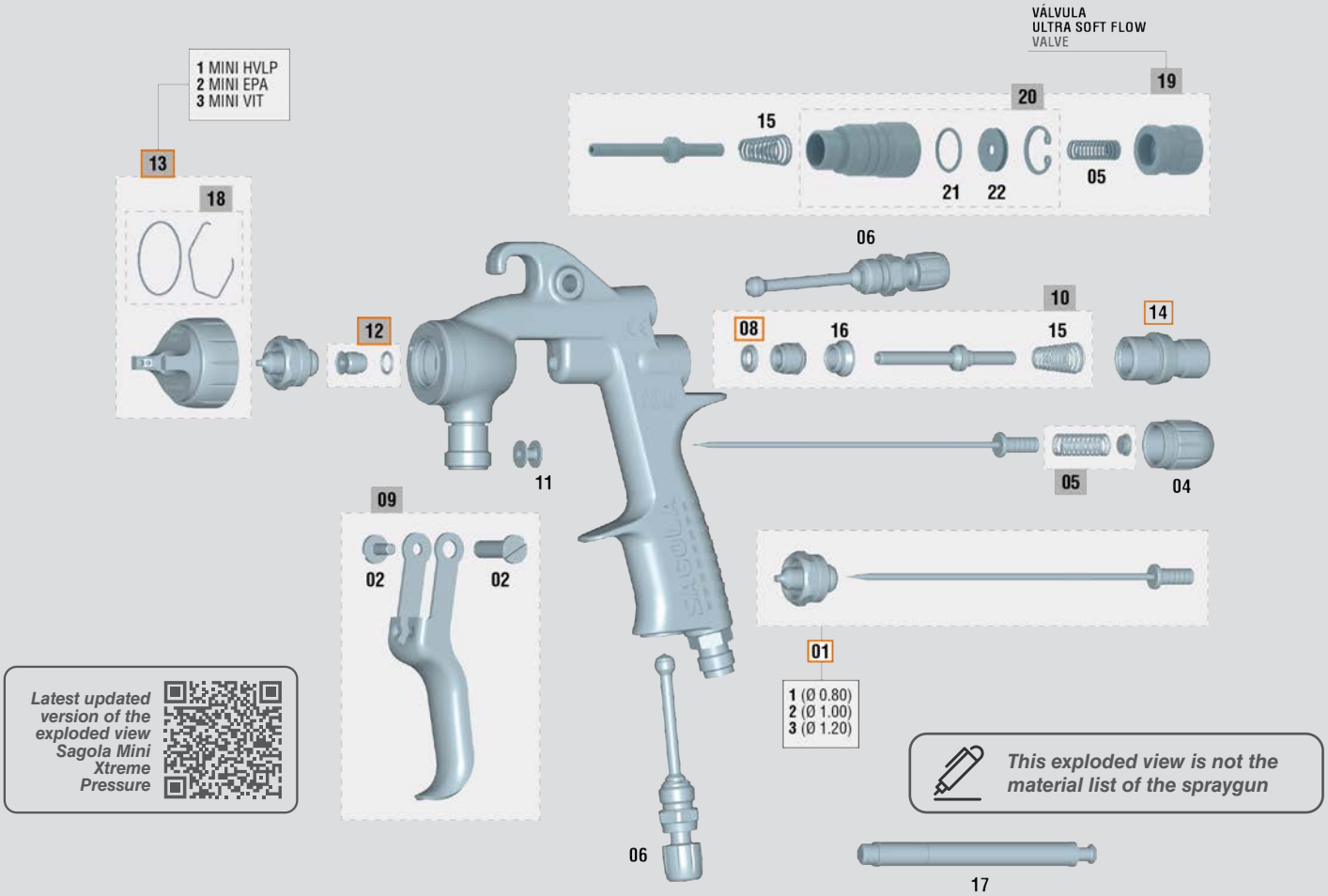

We call critical parts those that can stop the work of a spraygun: wear parts, gaskets, packings,... Sagola spray guns design offers **ONLY 5 CRITICAL PARTS** ( ). Only 5 references in store to provide a 100% effective after-sales service.

SPARE PARTS — **Mini Xtreme Pressure**

No.	Code	Description
01/1	**10011200**	**Kit nozzle + needle 0.80 Serie Mini**
01/2	**10011201**	**Kit nozzle + needle 1.00 Serie Mini**
01/3	**10011202**	**Kit nozzle + needle 1.20 Serie Mini**
02	56418429	Kit screw + trigger shaft (short)
04	57810340	Product regulator wheel
05	56410043	Spring Kit
06	56415252	Air flow / Fan regulator
08	**56418441**	**Air valve washer (6 units)**
09	56418637	Trigger Kit
10	56418644	Air valve Kit
11	51910605	Bushing
12	**56418034**	**Complete packing nut Kit**

SPARE PARTS — **Mini Xtreme Pressure**

No.	Code	Description
13/1	**56418526**	**Aircap Mini HVLP**
13/2	**56418525**	**Aircap Mini EPA**
13/3	**56418560**	**Aircap Mini VIT**
14	**56411623**	**Product needle guide box**
15	54710312	Conical spring 10.6 x 6.7 x 29 x 1.05
16	54110012	Air valve seating
17	50210214	Air valve assembly key
18	56418680	Gasket nozzle Kit
19	56418697	Ultrasoft valve kit
20	56417419	Subassembly Ultrasoft valve body
21	54250818	FFKM O-ring Ø15 x 1.5
22	52710061	Ultrasoft valve plunger body

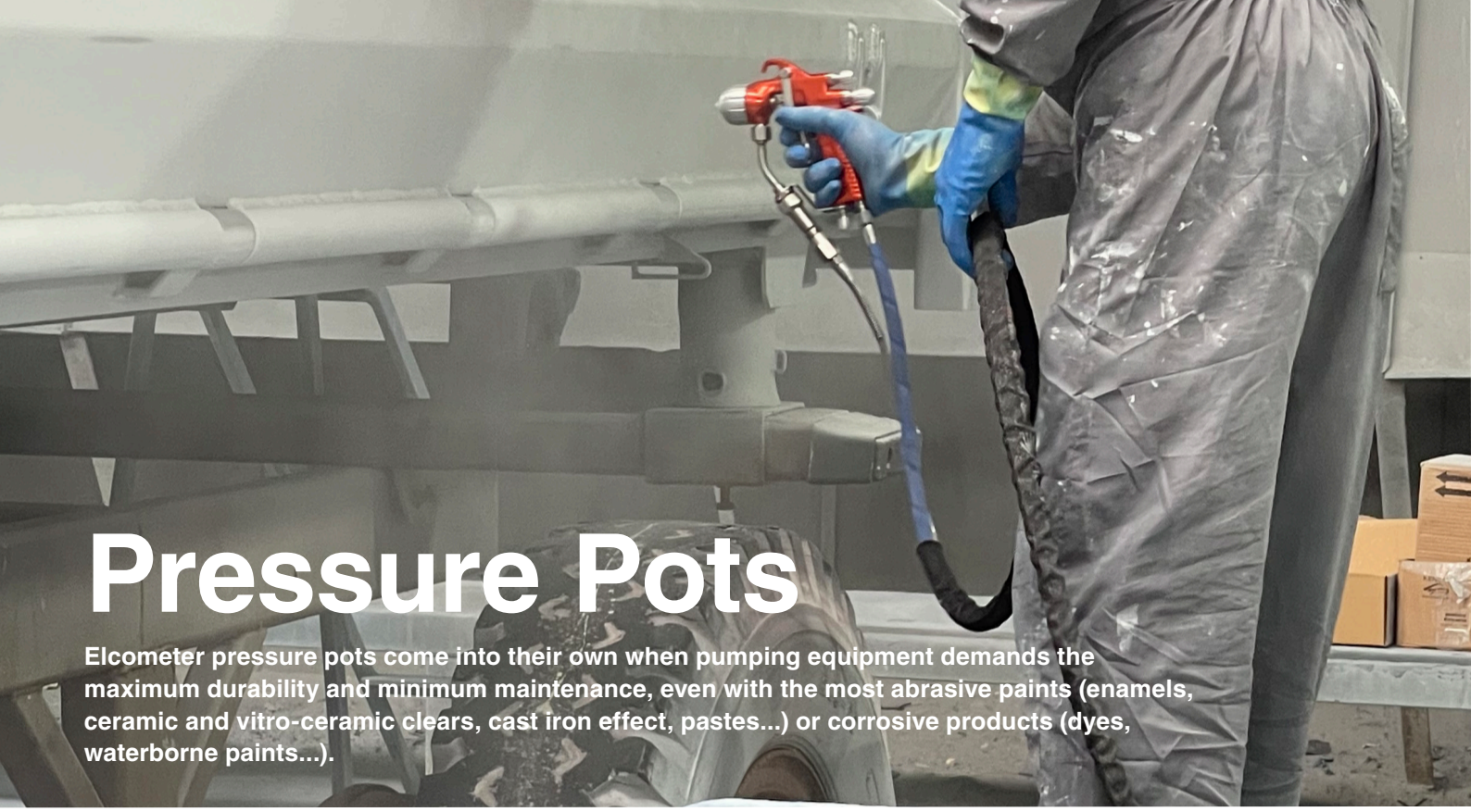

Pressure Pots

Elcometer pressure pots come into their own when pumping equipment demands the maximum durability and minimum maintenance, even with the most abrasive paints (enamels, ceramic and vitro-ceramic clears, cast iron effect, pastes...) or corrosive products (dyes, waterborne paints...).

Suitable for any type of paint

Made of aluminum or stainless steel, Elcometer's range of pressure pots is suitable for both waterborne and solvent basecoats, abrasive products, high-viscosity primers or fluid dyes. Check our range, there is an ideal configuration for your product.

Top outlet

Elcometer's superior product outlet pressure pots minimize cleaning tasks. Avoid pouring paint into the pressure tank by using one of our interchangeable aluminum tanks or by directly inserting the paint bucket. Simply remove it after painting, and the pressure pot is almost clean.

Maintenance free

An adequate cleaning process is enough to maintain the Sagola pressure pot. There are no wear parts inside so focus on getting a good finish.

High-end features

Double high precision regulators, various mixer options: Manual, pneumatic rotary, pneumatic alternative; discharge valve, high quality materials,... Sagola pressure pots are designed and built following the highest quality standards.

Components - Sagola pressure pots

Air and product hose

8 x 15 mm. anti-static air hose and
6 x 8 mm. product hose with Nylon cover.
Light and resistant hose. (see page 171)

Version
1.8 m. (5.9 ft) air + product hose + cover
5 m. (16.4 ft) air + product hose + cover
7.5 m. (24.6 ft) air + product hose + cover
10 m. (32.8 ft) air + product hose + cover
15 m. (49.2 ft) air + product hose + cover
20 m. (65.6 ft) air + product hose + cover

Introduction

Elcometer's range of **pressure pots** is the best option for large surface projects where a good balance between application speed, finish quality and easy cleaning is required.

Made of stainless steel or aluminum with high-precision regulators, several mixer options (manual, pneumatic...) and superior product outlet; an extremely easy system to clean and maintain.

Versions in 2.5 and 10 liters of capacity. Increase your productivity and save time by not having to refill the gun cup.

Pressure pots main news

01 TANK OR DEPOSIT made of Stainless Steel or Aluminum.
Very robust and easy to clean.

02 TANK LID made of Stainless Steel or Aluminum.
High quality sealing to prevent leaks.

03 PRODUCT OUTLET VALVE.
Ball valve to open or close the product outlet.

04 MANUAL PRODUCT MIXER. (Optional)
Mixer for homogenization of the product.

05 AIR INLET.
Air inlet of 1/4".

06 SPRAYGUN PRESSURE REGULATOR.
Precise control of gun pressure.

07 POT PRESSURE REGULATOR.
High quality gauge.

08 DISCHARGE VALVE. Pressure release valve.

09 CLAMPS. Very robust clamps for closing the pot.

10 MIXER BLADES. (Optional)

Elcometer P10T

The range of Elcometer pressure pots is characterized by its simple handling and minimal maintenance to provide a great service to professional painting.

Maximum quality of finishes for industrial vehicles painting industries.

The Elcometer P10T pressure pot is made of Stainless Steel, being a very robust product.

The tank capacity is 10 liters. Includes manual product mixer or pneumatic mixer. The product outlet is in the upper area of the pot.

Double, high precision, robust regulators with discharge valve.

Valid for waterborne and solvent-based paints. Ideal for Industrial Bodyshop and Nautical Sports.

REGULATIONS:
SPAIN: AP 1070 FBZ 2330
FRANCE: CODAP
GREAT BRITAIN: British standard 1101-1977
GERMANY: A.D. Merkblätter
ATEX Ex 2 II GX

Elcometer P10T with Pneumatic mixer (optional)

TECHNICAL DATA

		Elcometer P10T
Weight	11.2 Kilograms	24.7 lbs
Dimensions (with mixer)	20.8 x 20.8 x 55.3 cm.	8.2 x 8.2 x 21.8 “
Tank capacity	10 liters	2.64 gal
Maximum air inlet pressure	4 bar	58 psi
Air inlet connection	BSP 1/4” Male	
Product outlet connection	BSP 3/8” Male	
Air pressure regulator range	0 - 8 bar	0 - 116 psi
Product pressure regulator range	0 - 4 bar	0 - 58 psi
Materials in contact with the product	Stainless steel, POM, NBR and bronze	

VERSIONS / ACCESSORIES

Description	Code
Elcometer P10T Pressure Pot (manual mixer)	**10540703**
Elcometer P10T Pressure Pot (pneumatic mixer)	**10540705**
Elcometer P10T **Full painting equipment** Includes Sagola X 4100 Series 1.20 [XT01 B] pressure spraygun	**10540756**
Pneumatic mixer	**56410118**
Interchangeable tank 10 liters made of stainless steel	**52411607**
Single-use disposable interchangeable tank. 10 units	**52411616**

Special pressure spraygun for industrial jobs. High quality finishes. Maximum application speed and productivity.

Elcometer P10T

Elcometer P10T Pressure Pot spare parts

ELCOMETER is synonymous with quality and service. For this reason, ELCOMETER provides a comprehensive spare parts and service guarantee, ensuring the proper maintenance of all its products, even those sold more than 10 years ago. To ensure the best possible results and a high-quality finish, the spray gun must be thoroughly cleaned after each use and periodically checked for damaged or worn components. Any damaged or worn parts must be replaced.

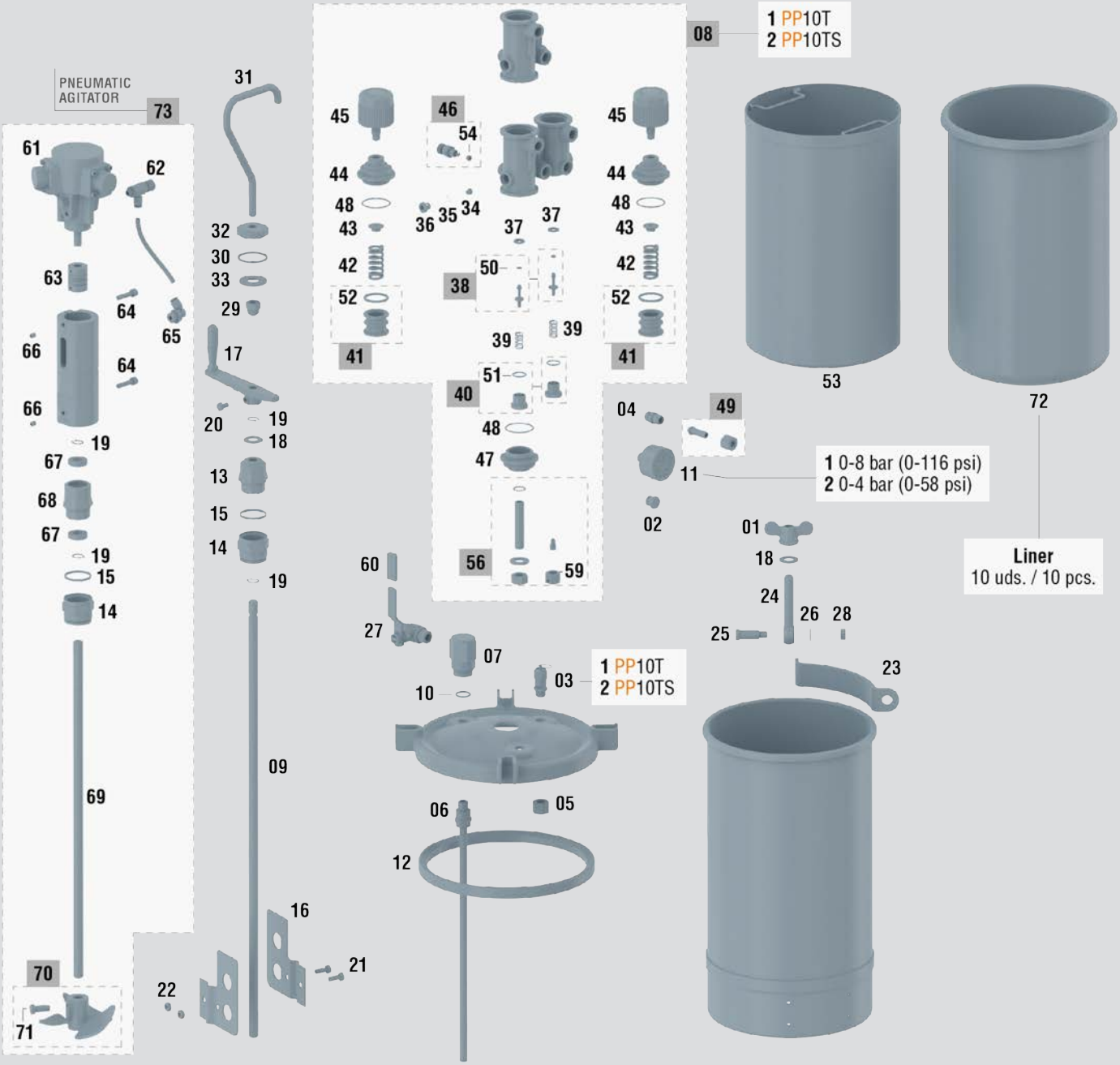

This exploded view is not the material list of the Pressure Pot

Elcometer pressure pots range

Elcometer P10T

SPARE PARTS — Elcometer P10T

No.	Code	Description
01	54410101	Pot closing handle
02	55712108	Connection Plug 1/4” x19 M
03/1	56456801	Safety valve 4 bar at 1/4” x19
03/2	57550904	Safety valve 7 bar at 1/4” x19
04	55710316	Connection 1/4” x19 M - 1/4” x19 M
05	87460505	Nut 1/4” x19
06	56417131	Upper outlet tube 10 L
07	51610611	Product outlet head tube
08/1	56415109	Double pressure regulator
08/2	56415110	Single pressure regulator
09	53111018	Agitator shaft
10	54210263	Product output close gasket
11/1	54550022	Gauge 8 1/4” centered back
11/2	54550007	Gauge 8 1/4” centered back
12	54210269	Closing washer
13	51910227	Agitator shaft bushing
14	56410068	Agitator shaft nut
15	54210272	Support closing washer
16	50410211	Sheet agitator blade (stainless steel)
17	54410204	Manual agitator handle
18	50850003	Washer DIN 125 ST Ø13 zinc plated
19	50650301	Elastic ring E-12
20	57251002	Screw DIN 933 M 6x10 zinc plated
21	57251004	Screw DIN 933 M 6x15 s. steel
22	57450905	Nut DIN 934 M 6x100 s. steel
23	51510209	Pot closing clamp
24	53110308	Clamp screw
25	57210016	Clamp screw shaft
26	50850405	Washer DIN 125 Ø 8.4 zinc plated
27	57550110	Spherical closing valve M/M 3/8" lever
28	57450909	Nut DIN 934 M 8x125 zinc plated
29	57451005	Nut DIN 1587 M 10x150 s. steel
30	54210270	Support Closing washer (6110 Co)
31	54410203	Transport handle (6110 Co)
32	51910226	Lid closing bushing (6110 Co)
33	50850018	Special washer 11 x 35 x 3 s. steel

SPARE PARTS — Elcometer P10T

No.	Code	Description
34	57510003	Regulator anti-return closing valve
35	54710215	Cylindrical spring 6.8 x 12 x 0.3
36	55712159	Regulator anti-return plug
37	50810209	Regulator closing washer
38	56410021	Pressure regulator end piston
39	54710233	Cylindrical spring 10.8 x 27 x1.2
40	56414906	Lower cap plug
41	56414715	Air regulator piston
42	54710254	Cylindrical spring 20 x 41 x 3.25
43	51911517	Regulator spring end bushing
44	57411305	Pressure regulator end nut
45	57810327	Air pressure regulator wheel with shaft
46	56415802	Regulator Exhaust Assembly
47	57411208	Regulator holding nut
48	54250975	Junta tórica 32 x 2 nitrilo
49	56414908	Hose connection 8 mm. + nut 1/4"
50	54251001	O-ring 3.68 x 1.80 viton
51	54250939	O-ring 14 x 2 nitrile
52	54251003	O-ring 24.99 x 3.53 viton
53	52411607	interchangeable tank 10 L (s. steel)
54	54210217	Closing gasket
56	56410074	Regulator coupling kit
59	53610201	Porous bronze filter
60	53810025	Rubber valve handles
61	10510301	1/4 HP Pneumatic rotative motor
62	57510020	Bidirectional flow micro regulator 1/8”
63	55750029	Aluminium flexible coupling Ø12x10
64	57250806	Screw M6 blued
65	55751801	Or. racord 1/4" to tube 6 mm + washer
66	87261810	Pin DIN 916 M 6 X 8
67	56050021	Rigid ball bearing
68	51910237	Bushing 10L pressure pot shaft
69	53111025	10L pressure pot shaft 438 mm length
70	50410003	Nylon propeller rotary axis
71	57251099	Hexagonal screw BSW 5/16" - 18 x 3/4"
72	52411616	10L. Liner interchangeable tank (10 pcs)
73	56410118	Pneumatic motor kit

Do not use metal tools or objects to clean the Pressure pot

Sagola 610

SAGOLA pressure pot with a 10 liters deposit capacity.

Pot body made of steel and aluminum lid. It incorporates a top handle for holding and transporting.

Includes high-precision double regulation with robust pressure gauges. Pressure discharge valve. Top product output.

Pressure pot valid for the application of medium-low viscosity paints. Valid for solvent based products.

REGULATIONS:
2014/68/EU
Certificate Module D1 Nº: 01 202 TVN/Q-05 0113
ASME Sec. VIII Div. I, 2004 Ed.
ISO 9606-1:2012, ISO 15614-1:2004

TECHNICAL DATA

		SAGOLA 610
Weight	12.6 Kilograms	27.78 lbs
Dimensions (with handle)	25 x 25 x 38.5 cm.	9.8 x 9.8 x 15.16 “
Tank capacity	10 liters	338.14 fl oz.
Maximum air inlet pressure	4 bar	58 psi
Air inlet connection	BSP 1/4” Male	
Product inlet connection	BSP 3/8” Male	
Air pressure regulator range	0 - 8 bar	0 - 116 psi
Product pressure regulator range	0 - 4 bar	0 - 58 psi
Working temperature range	0 - 50 °C	32 - 122 °F
Materials in contact with the product	Steel, aluminum, POM and Teflon	

VERSIONS

Description	Code
Sagola 610 Pressure Pot	**40000273**
610 **Full painting equipment** Includes 3300 GTO 1.40 [EPA] pressure spraygun and air and product hose 5 m. (16.4 ft)	**10540798**

High performance pressure spray gun with large fan size. High application speed. High transfer aircaps.

8 x 15 mm. anti-static air hose and
6 x 8 mm. product hose with Nylon cover.
Light and resistant hose.

Elcometer PP2-5T

Small size ELCOMETER pressure pot with top handle for easy transport.

Pot body and lid made of aluminum.

Includes pressure regulator with gauge. Pressure discharge valve. Top product output.

Tank capacity is 2.5 liters (84.5fl oz).

Pressure pot valid for the application of medium-low viscosity paints. Valid for solvent based products.

REGULATIONS:
2014/68/UE

TECHNICAL DATA

	Elcometer PP2-5T	
Weight	1.8 Kilograms	4.02 lbs
Dimensions (with handle)	16.5 x 16.5 x 38.5 cm.	6.5 x 6.5 x 15.16 “
Tank capacity	2.5 liters	84.5 fl oz.
Maximum air inlet pressure	3.4 bar	50 psi
Air inlet connection	BSP 1/4” Male	
Product inlet connection	BSP 3/8” Male	
Air pressure regulator range	0 - 6 bar	0 - 80 psi
Working temperature range	0 - 50 °C	32 - 122 °F
Materials in contact with the product	Anodized aluminium, INOX and NBR	

VERSIONS

Description	Code
Elcometer PP2-5T Pressure Pot	**10540802**
Elcometer PP2-5T **Full painting equipment** Includes Sagola X 4100 Series 1.00 [XT01 B] pressure spraygun	**10540850**
Elcometer PP2-5T **Full painting equipment** Includes Sagola X 4100 Series 1.40 [XT01 B] pressure spraygun	**10540851**

Special pressure spraygun for industrial jobs. High quality finishes. Maximum application speed and productivity.

Sagola 610 / Elcometer PP2-5T

Sagola 610 / Elcometer PP2-5T Pressure Pot spare parts

ELCOMETER is synonymous with quality and service. For this reason, ELCOMETER provides a comprehensive spare parts and service guarantee, ensuring the proper maintenance of all its products, even those sold more than 10 years ago. To ensure the best possible results and a high-quality finish, the spray gun must be thoroughly cleaned after each use and periodically checked for damaged or worn components. Any damaged or worn parts must be replaced.

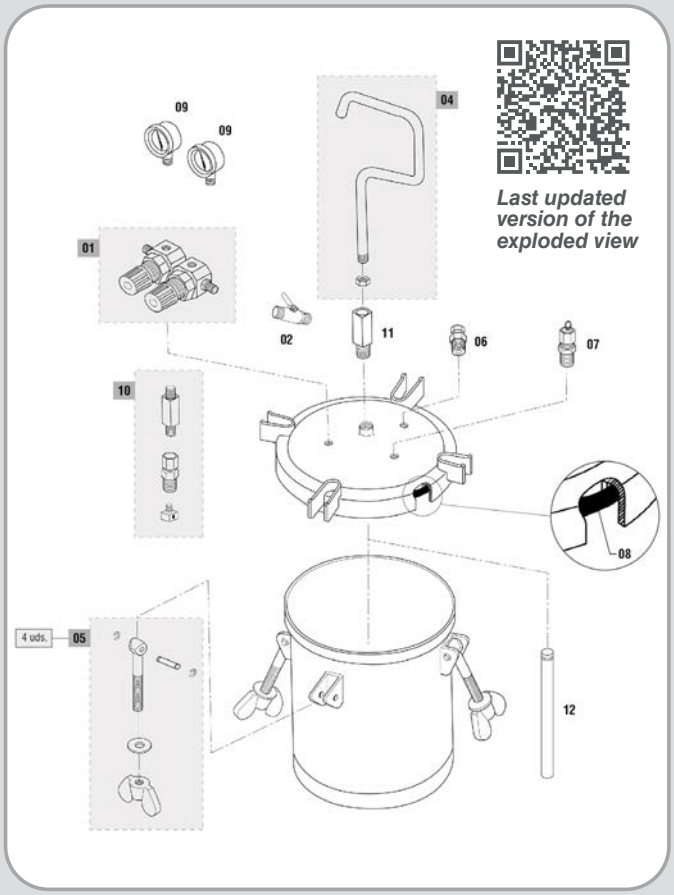

Last updated version of the exploded view

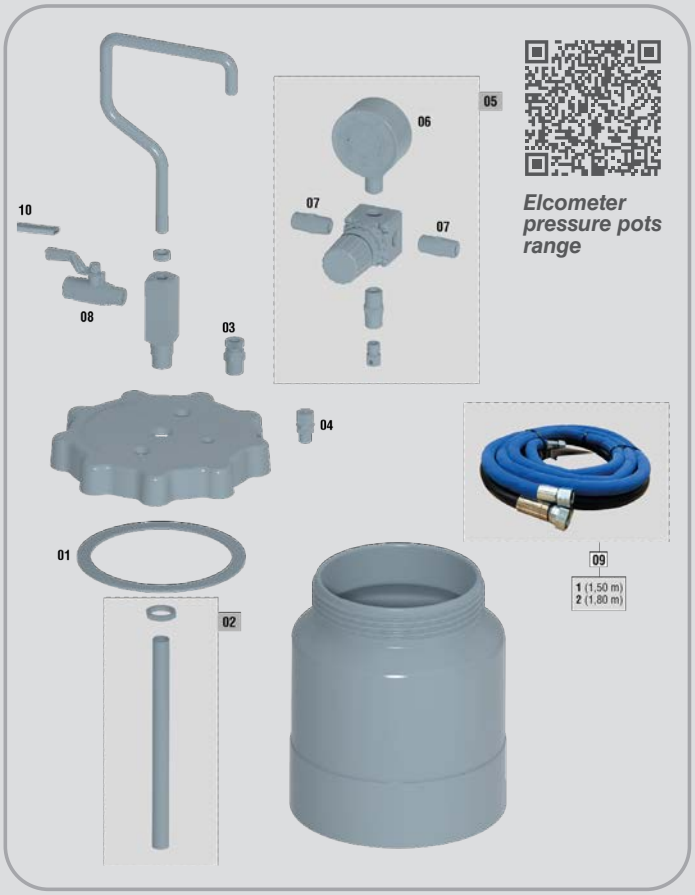

Elcometer pressure pots range

SPARE PARTS — Sagola 610

No.	Code	Description
01	56410077	Pressure regulation group
02	57550112	Closing valve 1/4" M - 3/8" M
04	56418496	Transport handle Kit
05	56418497	Pot closing Kit (4 units)
06	56417505	Pressure discharge valve
07	56456801	Safety valve
08	54210279	Pot closing washer
09	54550025	Gauge (bar/psi) 1/4" lateral Ø52
10	56414922	Regulation group extension plugs Kit
11	49000731	Product oultet tube head
12	49000732	Product oultet tube

SPARE PARTS — Elcometer PP2-5T

No.	Code	Description
01	49000627	Pot closing washer
02	49000628	Product oultet tube
03	49000629	Pressure discharge valve
04	49000630	Safety pressure valve
05	49000631	Pressure regulator
06	84560002	Gauge (bar/psi) 1/4" lateral Ø52
07	11000101	Connection 1/4" M-M (2 units)
08	57510019	Product outlet tap 1/4" M - 3/8" M
09/1	56418708	1.5 m. air + product hose set
09/2	56414128	1.8 m. air + product hose set
10	53810025	Rubber valve handles

This exploded view is not the material list of the Pressure Pot

Do not use metal tools or objects to clean the Pressure pot

Pneumatic Pumps

High flow. High requirement. Simple handling and low air consumption with high performance.

Elcometer's range of pneumatic **double diaphragm pumps** is the ideal choice for demanding bodyshop applications.

Free flow rates of up to 40 L/min allow multiple spray guns to be used simultaneously.

Ideal for continuous production environments where work can not be interrupted to refill a pot or pressure tank.

Special versions

Besides the standard versions, we offer two special versions:

Double outlet version: Version with double product outlet for the use of two guns at the same time.

2K paint version: Version with two absorption probes to work with 2K products. (Mix ratio 1:1)

Special version
Double product outlet

Special version
2k Products

Different settings options

Choose the most suitable version for your jobs:

Chassis: Trolley or wall version

Absorption: Absorption hose or 5L gravity tank.

Any type of product

Suitable for waterborne or solvent based products... basecoat, transparent lacquers, primers, fillers,...

Any product with any viscosity or density. Special kit for abrasive products.

Air and product hose set for low-pressure equipment.
8 x 15 mm. anti-static air hose and
6 x 8 mm. product hose with Nylon cover.
Light and resistant hose. (see page 161)

Double diaphragm pumps

Double diaphragm pump main news

01 ABSORPTION PROBE.

02 GRAVITY DEPOSIT (ACCESORY).
Code 30090399.

03 PRODUCT INLET.

04 PRODUCT OUTLET. 3/8".

05 AIR PRESSURE REGULATOR (Pump).

06 AIR PRESSURE REGULATOR (Gun).

07 ANTI-PULSE FILTER.

08 PRODUCT PRESSURE REGULATOR.

09 PRODUCT RETURN PIPE (Purge).

10 PRESSURE GAUGE (Pump).

11 PRESSURE GAUGE (Gun).

12 AIR INLET TO THE EQUIPMENT.

13 TRANSPORT CARRIAGE.

14 WALL SUPPORT (OPTIONAL).

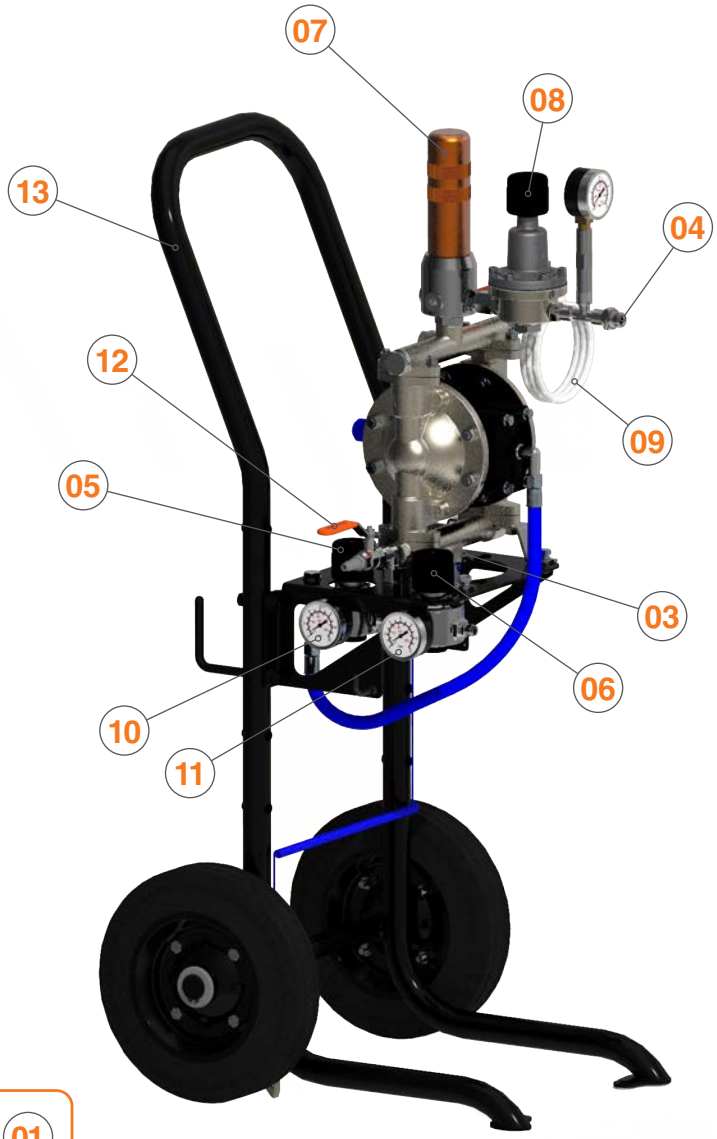

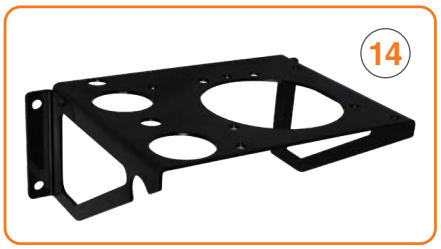

Elcometer KARA 1/40

Double membrane pneumatic equipment prepared for high productions. It has the capacity to use several pistols at the same time.

It offers easy handling and low air consumption with high performance. Minimum cost and maintenance.

With a flow rate of 40 L/min., it is designed to meet the needs of small metal, plastic, wood and industrial bodyshop industries at the highest level.

Valid for products such as lacquers and varnishes, basecoats, dyes, enamels, primers, fillers, glues,..., in general, medium viscosity products.

REGULATIONS:
2006/42/CE
ATEX Ex 2 II GX
UNE-EN-13463-1:2011,
UNE-EN ISO 12100:2012, EN 809,
EN12621, EN12162 and EN 1127-1

Accessory
Gravity deposit

TECHNICAL DATA

	Elcometer KARA 1/40	
Weight (trolley, absorption and regulator)	18.5 Kilograms	40.8 lbs
Dimensions (trolley, absorption and regulator)	46.5 x 50.1 x 95.2 cm.	18.31 x 19.72 x 37.52 “
Maximum air consumption (60 cycles/min.)	580 L/min.	20 cfm
Maximum air inlet pressure	7 bar	102 psi
Minimum supply hose Ø	6 mm. - 1/4”	
Free flow (60 cycles/min.)	40 L/min.	1.41 cfm
Air ilet connection	1/4” GAS BSP Female	
Product outlet connection	3/8” GAS BSP Male	

VERSIONS

Description	Code
Elcometer KARA 1/40 with Trolley mount, absorption probe	**30920409**
Elcometer KARA 1/40 (*with Trolley mount, absorption probe*) **full painting equipment**. Includes X 4100 Series 1.20 [765] pressure spraygun	**30920455**
Elcometer KARA 1/40 (*with Trolley mount, absorption probe*) **full painting equipment**. Includes X 4100 Series 1.20 [XT03] pressure spraygun	**30920456**
Elcometer KARA 1/40 (*with Trolley mount, absorption probe*) **full painting equipment**. Includes X 4100 Series 1.20 [XT01B] pressure spraygun	**30920457**
Elcometer KARA 1/40 (*with Wall mount, absorption probe*) **full painting equipment**. Includes X 4100 Series 1.20 [765] pressure spraygun	**30920451**
Elcometer KARA 1/40 (*with Wall mount, absorption probe*) **full painting equipment**. Includes X 4100 Series 1.20 [XT03] pressure spraygun	**30920452**
Elcometer KARA 1/40 (*with Wall mount, absorption probe*) **full painting equipment**. Includes X 4100 Series 1.20 [XT01B] pressure spraygun	**30920453**

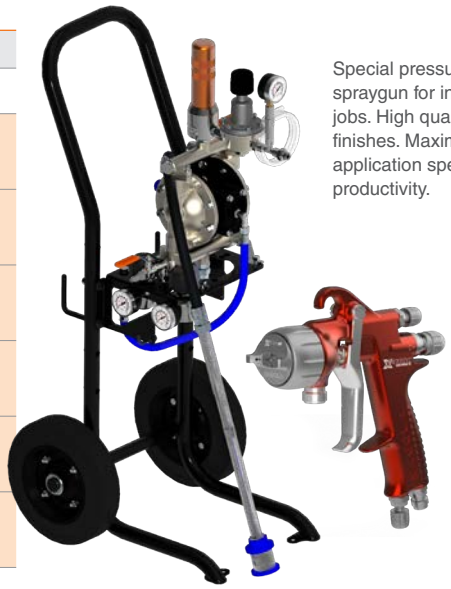

Special pressure spraygun for industrial jobs. High quality finishes. Maximum application speed and productivity.

Ask for more information about the different spray guns versions.

Elcometer KARA 1/30

Double diaphragm pneumatic equipment prepared for medium productions.

Easy to use. Reduced cost and maintenance. Very low air consumption.

Flow rate 30 L/min. Designed to meet the needs of small metal, plastic, and wood industries.

Valid for products such as lacquers and varnishes, basecoats, enamels, primers, fillers,..., in general, medium viscosity products.

Accessory
Gravity deposit

REGULATIONS:
2006/42/CE
ATEX Ex 2 II GX
UNE-EN-13463-1:2011,
UNE-EN ISO 12100:2012, EN 809,
EN12621, EN12162 and EN 1127-1

TECHNICAL DATA

		Elcometer KARA 1/30
Weight (trolley, absorption and regulator)	10.5 Kilograms	23.15 lbs
Dimensions (trolley, absorption and regulator)	32.4 X 41.5 X 88.0 cm.	12.76 x 16.35 x 34.65 “
Maximum air consumption (60 cycles/min.)	380 L/min.	13 cfm
Maximum air inlet pressure	6 bar	87 psi
Minimum supply hose Ø	6 mm. - 1/4”	
Free flow (60 cycles/min.)	30 L/min.	1.06 cfm
Air ilet connection	1/4” GAS BSP Female	
Product outlet connection	3/8” GAS BSP Male	

VERSIONS

Description	Code
Elcometer KARA 1/30 with Trolley mount, absorption probe	**30920509**
Elcometer KARA 1/30 (*with Trolley mount, absorption probe*) **full painting equipment**. Includes X 4100 Series 1.20 [765] pressure spraygun	**30920555**
Elcometer KARA 1/30 (*with Trolley mount, absorption probe*) **full painting equipment**. Includes X 4100 Series 1.20 [XT03] pressure spraygun	**30920556**
Elcometer KARA 1/30 (*with Trolley mount, absorption probe*) **full painting equipment**. Includes X 4100 Series 1.20 [XT01B] pressure spraygun	**30920557**
Elcometer KARA 1/30 (*with Wall mount, absorption probe*) **full painting equipment**. Includes X 4100 Series 1.20 [765] pressure spraygun	**30920551**
Elcometer KARA 1/30 (*with Wall mount, absorption probe*) **full painting equipment**. Includes X 4100 Series 1.20 [XT03] pressure spraygun	**30920552**
Elcometer KARA 1/30 (*with Wall mount, absorption probe*) **full painting equipment**. Includes X 4100 Series 1.20 [XT01B] pressure spraygun	**30920553**

Special pressure spraygun for industrial jobs. High quality finishes. Maximum application speed and productivity.

Ask for more information about the different spray guns versions.

Elcometer KARA 1/40

Elcometer KARA 1/40 pneumatic pump spare parts

ELCOMETER is synonymous with quality and service. For this reason, ELCOMETER provides a comprehensive spare parts and service guarantee, ensuring the proper maintenance of all its products, even those sold more than 10 years ago.

Elcometer KARA pneumatic pumps range

This exploded view is not the material list of the Pressure Pot

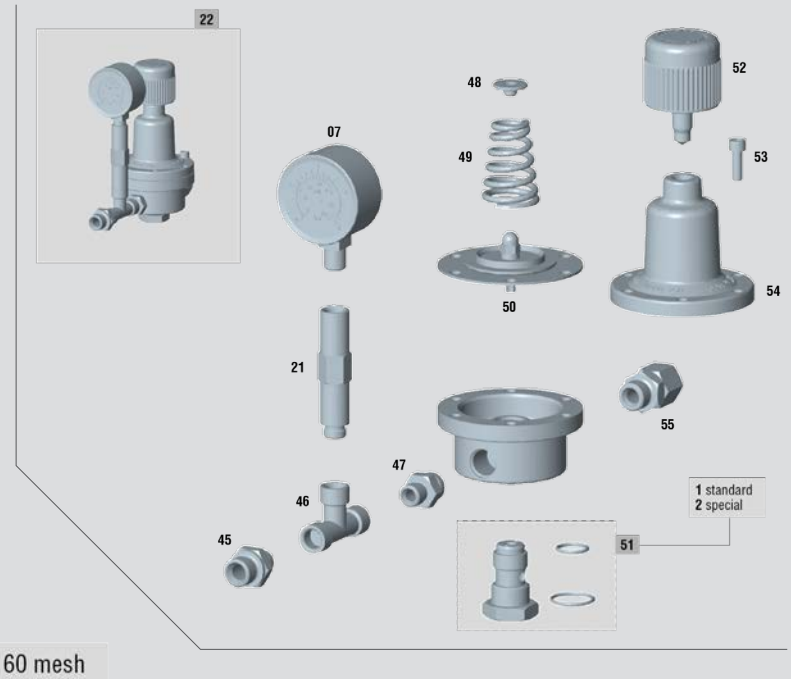

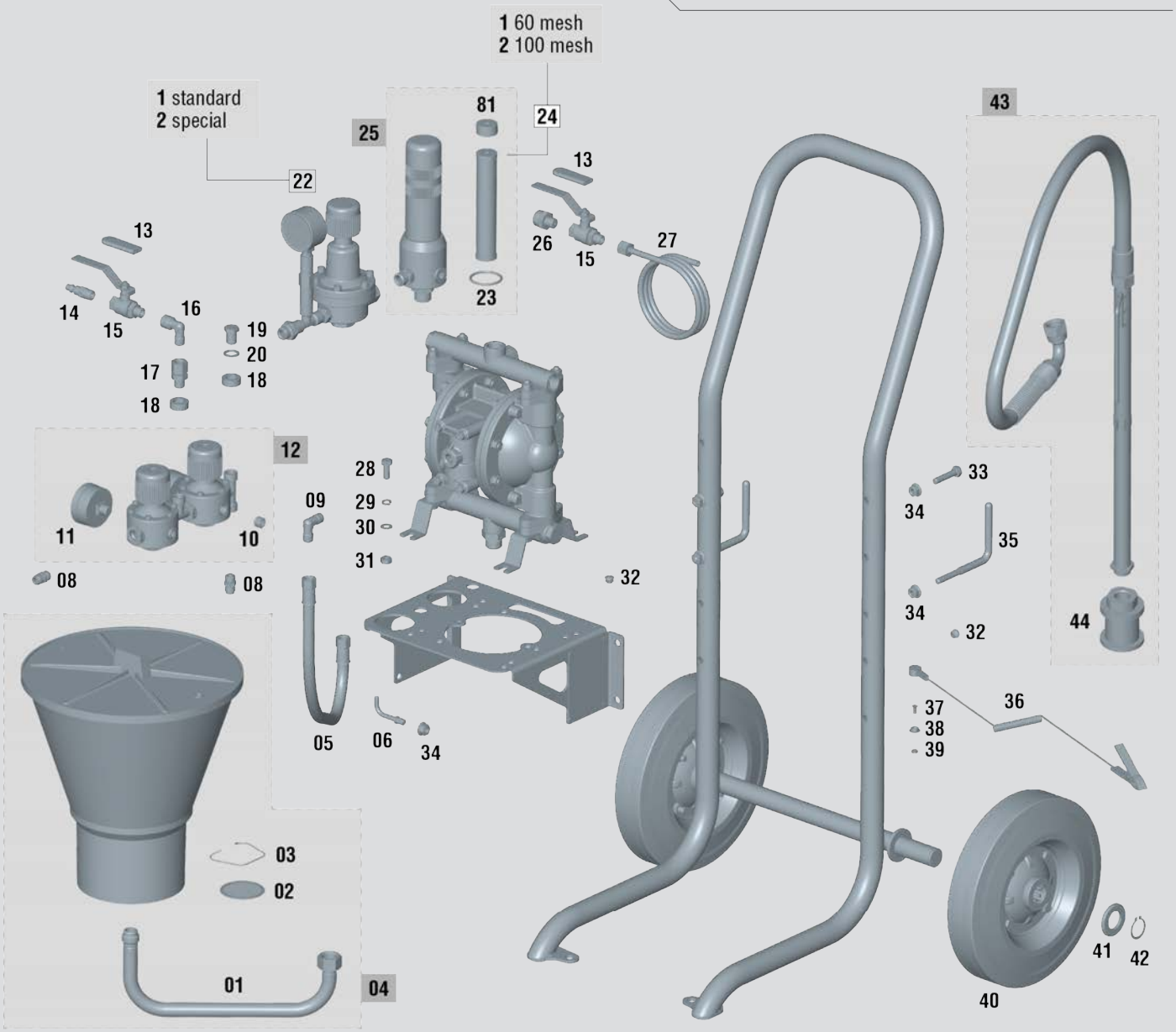

Elcometer KARA 1/40

To ensure the best possible results and a high-quality finish, the spray gun must be thoroughly cleaned after each use and periodically checked for damaged or worn components. Any damaged or worn parts must be replaced.

SPARE PARTS KARA 1/40

No.	Code	Description
01	85760079	Funnel coupling
02	83660001	Filter
03	84760004	Spring
04	30090399	Product tank kit
05	84663812	Air product hose length
06	56310054	Wall bracket spraygun
07	84560002	Manometer 0 - 4 (2 esc) 1/4” GAS I
08	55710316	Connection 1/4” M
09	55750803	Connection angle 90° 1/4" M to 1/4" nut
10	55752117	Connection plug 1/4” DIN 906 A2 s.s.
11	54550016	Gauge 12 1/4”
12	56410058	Bidirectional regulator
13	53810025	Rubber valve handles
14	11020420	Connection male BSPT 1/4" Us-mil(2 u.)
15	57510019	Valve M-F 1/4" 25 bar
16	55750802	Connection angle 90° 1/4" M to 1/4" F
17	85760059	Loose connection assembly 1/4" M/F
18	80860052	Guide washer
19	85762125	Plug 1/4"
20	80860036	Washer 20x14x2 stainless steel
21	85770033	Union connection
22/1	52410019	Pressure regulator (standard)
22/2	86464717	Pressure regulator (abrassive)
23	54250802	PTFE O-ring 36x3 mm
24/1	83660030	Filter antipulse 60 mesh
24/2	83660029	Filter antipulse 100 mesh
25	56413512	Antipulsation assembly
26	85760201	Connection 1/2” BSPT to 1/a BSP
27	86410082	Draining hose pump
28	57251011	Screw DIN 933 M8x20 zinc-plated
29	50850004	Washer M8
30	80860504	Washer DIN 433 8
31	57450909	Hexagonal nut M8
32	85762173	Black plastic cap for tube Ø35
33	57251029	Blackened screw DIN 933 M8x40
34	57450703	Blackened nut din 6963 m8x1.25
35	56310053	Hose support, elcometer pump trolley
36	56411450	Grounded coiled electrical cable lug M8
37	57250702	Screw
38	52310008	Stud item of snap kit Ø10mm
39	57450902	Nut
40	56250206	Flat bushing rubber fix.wheel Ø250xØ25.4
41	80860403	Zinc-plated washer DIN 125 25.4

SPARE PARTS KARA 1/40

No.	Code	Description
42	80660310	Ring DIN 471 E-25 blued
43	86465206	Absorption sounding pumps
44	83660047	Absortion filter 1/2"
45	85760302	Connector 3/8" M - 1/4" M
46	55752004	T piece brass 1/4" H
47	85760024	Connection 1/4”x19 M to 3/8”x19 M
48	51911518	Spring end-push bushing
49	84760029	Conical spring
50	86463904	Regulation diaphragm assembly
51	87560037	Valve set (standard version)
51	87560039	Valvule kit (abrasives)
52	57810341	Air pressure regulator wheel with shaft
53	87260826	Screw DIN 912 M 6x18
54	57110202	Regulator bell-shaped lid
55	85770043	Loose connection 3/8" GAS 395100
56	30090020	Kit product valve
56	30090092	Valves kit (abrasive products)
57	87260027	Special screw
58	85761902	Silencer 1/2”
59	86462106	Side body assembly
60	87261031	Screw DIN 933 M 8 x 20 inx
61	82960101	Product zone closing disc
62	30090017	Kit diaphragm
62	30090096	Diaphragm kit for abrasive product
63	82960102	Pump disc
64	50650304	Clip DIN 471 E-20 mm blued
65	80660303	Ring DIN 471 E-12 blued
66	81560010	Pump clamp
67	30090018	Kit air distributors gaskets
68	81960601	Shaft jacket
69	83160717	Distributor shaft
70	80860069	Pump end washer
71	87160024	Distributor lid
72	80660011	Pump ring
73	85762117	Plug
74	54250946	O-ring 18x2 mm nitrile
75	81560009	Pump support clamp
76	30090019	Kit pneumatic distributor
77	50850402	Washer 6
78	57450904	Hexagonal nut M6
79	85770081	Brass reducer 3/8" M 1/2” F
80	56418581	Kit plate+insert distributor
81	87460051	Filter nut antipulse

Elcometer KARA 1/30

Elcometer KARA 1/30 pneumatic pump spare parts

ELCOMETER is synonymous with quality and service. For this reason, ELCOMETER provides a comprehensive spare parts and service guarantee, ensuring the proper maintenance of all its products, even those sold more than 10 years ago.

Elcometer KARA pneumatic pumps range

This exploded view is not the material list of the Pressure Pot

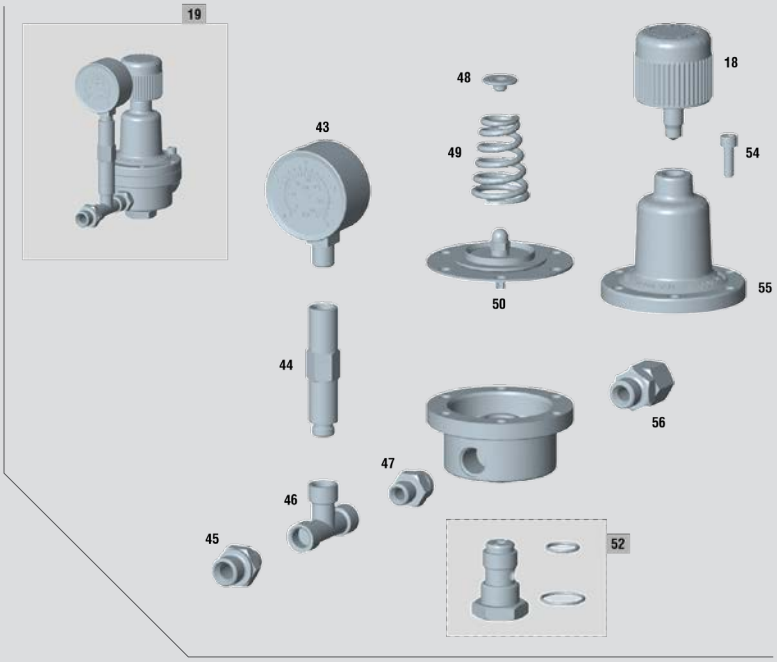

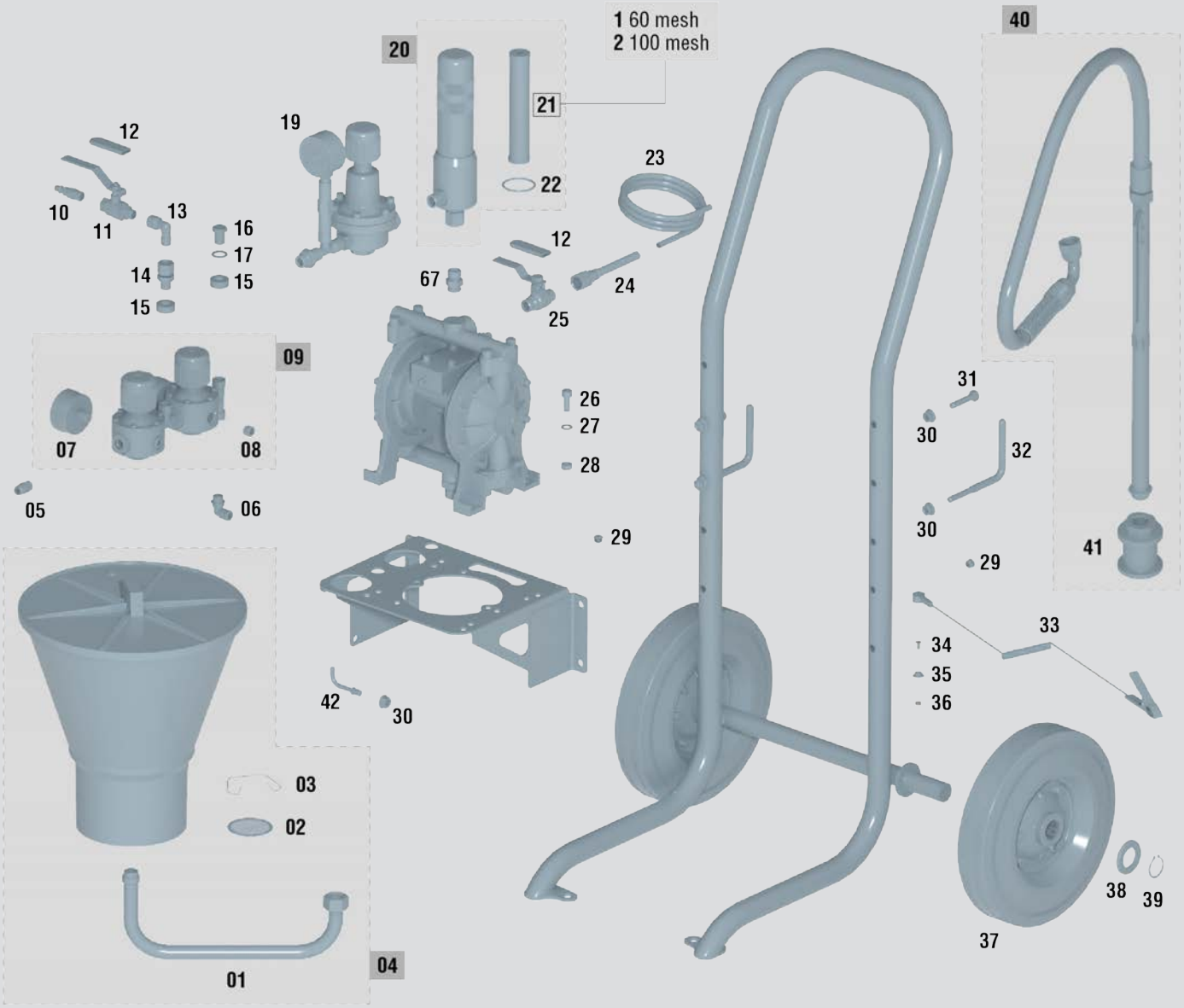

Elcometer KARA 1/30

To ensure the best possible results and a high-quality finish, the spray gun must be thoroughly cleaned after each use and periodically checked for damaged or worn components. Any damaged or worn parts must be replaced.

SPARE PARTS — KARA 1/30

No.	Code	Description
01	85760079	Funnel coupling
02	83660001	Filter
03	84760004	Spring
04	30090399	Product tank kit
05	55710316	Connection 1/4" M
06	55751802	Connection 1/4" M to 8mm with washer
07	54550016	Gauge 12 1/4”
08	55752117	Connection plug 1/4 DIN 906 A2 s.s.
09	56410079	Set 2 regulators mixing pumps
10	55710332	Connection BSPT 1/4" M Us-mil
11	57510019	Valve M-F 1/4" 25 bar
12	53810025	Rubber valve handles
13	55750802	Connection angle 90º 1/4" M to 1/4" F
14	85760059	Loose connection assembly 1/4" M/F
15	80860052	Guide washer
16	85762125	Plug 1/4"
17	80860036	Washer 20x14x2 stainless steel
18	57810341	Air pressure regulator wheel with shaft
19	86464715	Product regulator low pressure
20	56413513	Antipulsation assembly
21/1	83660030	Filter antipulse 60 mesh
21/2	83660029	Filter antipulse 100 mesh
22	54250802	PTFE O-ring 36x3 mm
23	60760104	Nylon hose 6x8 mm
24	55710362	Connection 6/8-3/8" M
25	57550110	Spherical closing valve M/M 3/4" lever
26	87260816	Screw DIN 912 M8x20 blued
27	80860504	Washer DIN 433 8
28	57450909	Hexagonal nut M8
29	85762173	Black plastic cap for tube Ø35
30	57450703	Blackened nut DIN 6963 M8x1.25
31	57251029	Blackened screw DIN 933 M8x40
32	56310053	Hose support
33	56411450	Grounded coiled electrical cable lug M8

SPARE PARTS — KARA 1/30

No.	Code	Description
34	57250702	Screw
35	52310008	Stud item of snap kit Ø10mm
36	57450902	Nut
37	56250206	Flat bushing rubber fix.wheel Ø250xØ25.4
38	80860403	Zinc-plated washer DIN 125 25.4
39	80660310	Ring DIN 471 E-25 blued
40	86465206	Absorption sounding pumps
41	83660047	Absortion filter 1/2"
42	56310054	Wall bracket spraygun
43	84560002	Manometer 0-4(2 esc) 1/4 GAS I
44	85770033	Union connection
45	85760302	Connector 3/8"M-1/4"M
46	55752004	T piece brass 1/4"H
47	85760024	Connection 1/4”x19 M to 3/8”x19 M
48	51911518	Spring end-push bushing
49	84760029	Conical spring
50	86463904	Regulation diaphragm assembly
51	49000485	Pump silence filter
52	87560037	Valve set (standard version)
53	49000483	Product output connector kit
54	87260826	Screw din 912 M 6x18
55	57110202	Regulator bell-shaped lid
56	85770043	Loose connection 3/8" GAS 395100
57	49000477	Kit valve superior
58	49000474	Kit hexagon screw (16 u.)
59	49000476	Kit lower valveK
60	49000484	Product input connector kit
61	49000475	Kit hexagon screw (8 u.)
62	49000478	Kit pump diaphragm
63	49000479	Pump drive shaft kit
64	49000480	Distributor pump shaft kit
65	49000482	Kit insert + plate distributor
66	49000481	Kit distributor
67	85770030	Connection 3/8” GAS M- 3/8” GAS M

Clean the pump correctly. Follow the cleaning steps in the instruction manual for proper operation of the equipment.

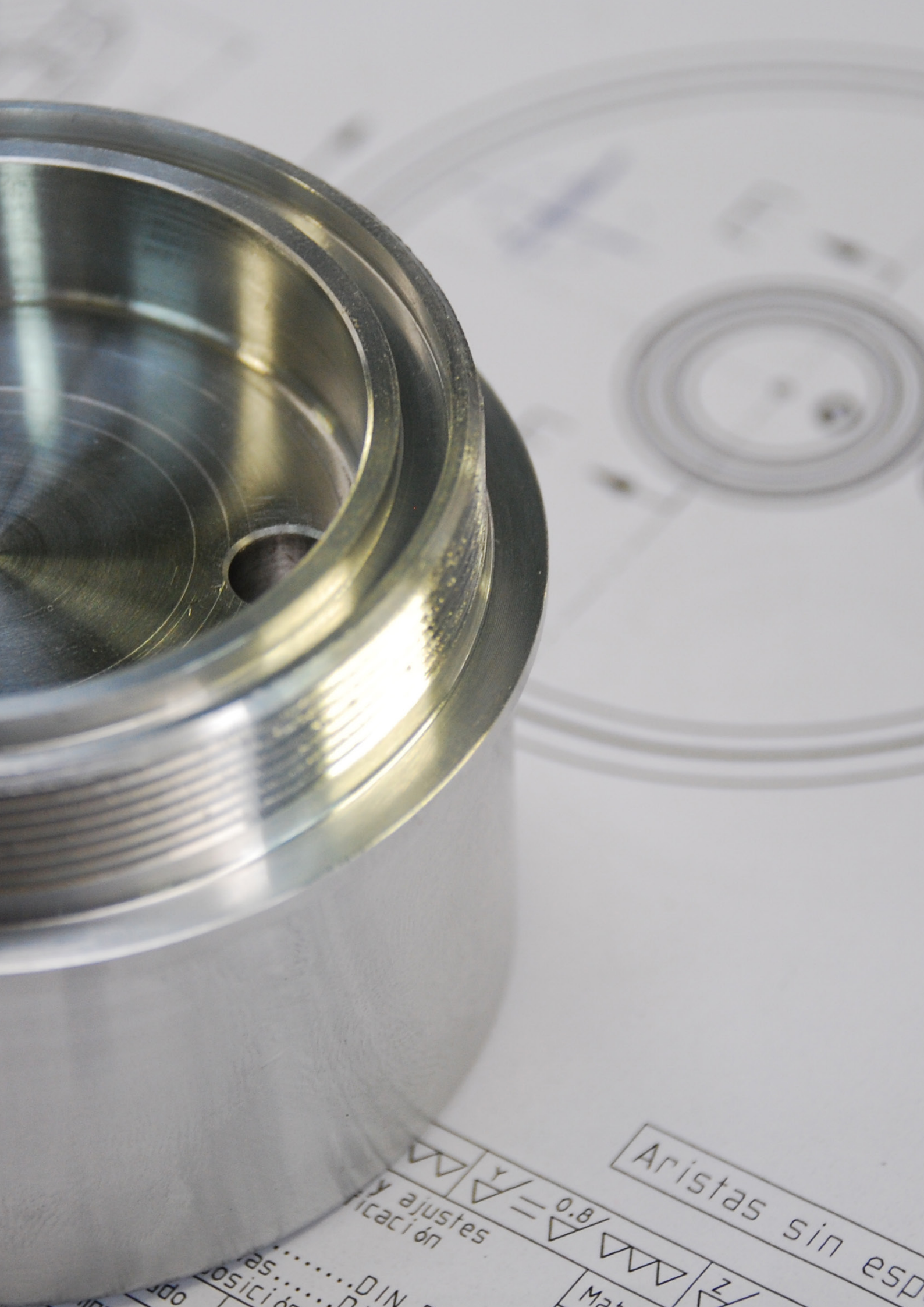
Aristas sin esp
ajustes
ticación
0.8
DIN

03

Accessories and Application Guides

Service, a key word in SAGOLA's strategic approach to bodyshop.

One of our main concerns is to make the painter be able to quickly identify and acquire the main SAGOLA original spare parts - nozzles, needles, aircaps, racks, deposits, regulators...

In this section we offer our application guides and our main accessories.

Bodyshop sprayguns

APPLICATION GUIDE
GRAVITY SPRAYGUN
BODYSHOP

		MAXIMUM TECHNOLOGY IN FINISHES						
		Extreme Finishes				Spot Repair		
	MODELS	SAGOLA 4600 HEX / 4600 DFT				SAGOLA 3400 COMPACT		
	AIRCAPS	DVR CLEAR	DVR BASE	DVR HVLP	DVR CLEAR PRO	Compact CLEAR	Compact BASE	Compact HVLP
	System	EPA	EPA	HVLP	EPA	EPA	EPA	HVLP
FINISHES – HS CLEARCOATS	Nozzle & Needle	1.2 XL - 1.3			1.2 XL - 1.3	1.2		1.2
	Air inlet pressure	2.0 - 2.2			2.0 - 2.2	1.8 - 2.0		1.8 - 2.0
FINISHES – HS CLEARCOATS	Nozzle & Needle	1.3			1.3	1.0 - 1.2		1.0 - 1.2
	Air inlet pressure	2.0 - 2.2			2.0 - 2.2	1.8 - 2.0		1.8 - 2.0
FINISHES – EXPRESS DRYING CLEARCOATS	Nozzle & Needle	1.2 - 1.2 XL			1.2 - 1.2 XL	1.0 - 1.2		
	Air inlet pressure	2.0 - 2.2			2.0 - 2.2	1.8 - 2.0		
FINISHES – WATERBORNE BASECOATS	Nozzle & Needle		1.2 - 1.2 XL	1.2 - 1.3			1.0	1.0
	Air inlet pressure		1.5 - 2.0	1.8 - 2.0			1.0 - 1.5	1.0 - 1.5
FINISHES – SINGLE STAGE	Nozzle & Needle	1.3 - 1.3 XL			1.3 - 1.3 XL			
	Air inlet pressure	2.0 - 2.4			2.0 - 2.4			
FINISHES – SOLVENT BASED BASECOATS	Nozzle & Needle		1.3	1.3			1.0	1.0
	Air inlet pressure		1.5 - 2.0	1.8 - 2.0			1.0 - 1.8	1.0 - 1.8
PRIMERS & FILLERS – PRIMERS WET ON WET	Nozzle & Needle	1.2 - 1.3 XL			1.2 - 1.2 XL		1.0	1.0
	Air inlet pressure	2.0 - 2.2			2.0 - 2.2		1.0 - 2.0	1.8 - 2.0
PRIMERS & FILLERS – PRIMERS SANDING	Nozzle & Needle							
	Air inlet pressure							
PRIMERS & FILLERS – FILLERS	Nozzle & Needle							
	Air inlet pressure							

APPLICATION GUIDE
PRESSURE SPRAYGUNS
BODYSHOP

		industrial vehicles					
		X 4100 Series					
	MODELS	PRESSURE				SUCTION	
	Aircaps	XT03	XT01 B	765	777	96	XT01
	System	HVLP	EPA	Conv.	Conv.	Conv.	EPA
HIGH GLOSS FINISHES. CLEARCOATS AND SINGLE STAGE PAINTS	Nozzle & Needle		1.0 - 1.2	1.2	1.0 - 1.2	1.6	1.6 - 1.8
	Air inlet pressure		2.0 - 2.5	3.0 - 3.5	3.0 - 3.2	2.8 - 3.0	2.0 - 2.5
	Product pressure		0.8 - 1.5	0.8 - 1.5	0.8 - 1.5		
BASECOATS. METALLIZED	Nozzle & Needle	0.8 - 1.0	0.8 - 1.0		1.0	1.4 - 1.6	1.6
	Air inlet pressure	2.0	2.0		2.5 - 3.0	2.5 - 2.8	2.0
	Product pressure	0.5 - 1.0	0.5 - 1.0		0.5 - 1.0		
INDUSTRIAL FINISHES. ENAMELS. STRUCTURE COATINGS. CHASSIS....	Nozzle & Needle	1.0 - 1.2	1.0 - 1.2	1.2		1.6	1.6 - 1.8
	Air inlet pressure	2.0	2.0	2.5 - 3.0		2.5 - 3.0	2.0
	Product pressure	1.0 - 1.5	1.0 - 1.5	1.0 - 1.5			
PRIMERS AND FILLERS	Nozzle & Needle	1.2 - 1.4	1.2 - 1.4	1.2 - 1.4		1.6	1.6 - 1.8
	Air inlet pressure	2.0	2.0	2.5 - 3.3		2.5 - 3.0	2.0
	Product pressure	1.2 - 2.0	1.5 - 2.0	1.5 - 2.0			

Bodyshop sprayguns

Competitive in finishes			PRIMERS AND FILLERS												
Fast and Robust			Versatility					Light. robust and economical							
3600 XPT			3300 GTO				2100 XD	CLASSIC PRO XD					CLASSIC LUX		
XPT CLEAR	XPT BASE	XPT HVLP	GTO EVO	GTO HVLP	GTO EPA	GTO 62S	XD TECH	HVLP	21EPA	25	28	36	40	41	42
EPA	EPA	HVLP	EPA	EPA	HVLP	Conv.	EPA	HVLP	EPA	Conv.	Conv.	Conv.	Conv.	Conv.	Conv.
1.2 - 1.4															
2.0 - 2.2															
1.3 - 1.4															
2.0 - 2.2															
1.2															
2.0 - 2.2															
	1.2 - 1.3	**1.2 - 1.3**													
	1.8 - 2.0	1.8 - 2.0													
1.3 - 1.4															
2.0 - 2.2															
	1.2 - 1.4	**1.2 - 1.4**													
	1.8 - 2.0	1.8 - 2.0													
1.3 - 1.4			**1.3 - 1.4**				**1.3 - 1.4**		**1.4**						
2.0 - 2.2			2.0 - 2.2				2.0 - 2.2		2.0 - 2.2						
				1.6 - 1.8	**1.6 - 1.8**			**1.6 - 1.8**	**1.6 - 1.8**				**1.6 - 1.8**		
				1.8 - 2.0	1.8 - 2.0			2.0	1.8 - 2.0				1.8 - 2.0		
						2.8				**2.0**	**2.5**	**2.5**		**2.0**	**2.5**
						2.5 - 3.0				2.8 - 3.0	2.5 - 3.0	2.5 - 3.0		2.5 - 3.0	2.5 - 3.0

Air caps

HVLP (High Volume Low Pressure)

HVLP technology was promoted by the U.S. Environmental Protection Agency in the 1970s with the intention of reducing excessive paint consumption resulting from high-pressure painting.

The system's basic principle involves decreasing the air pressure at the nozzle to reduce overspray caused by paint rebounding off the workpiece, thereby reducing paint consumption and emissions of toxic components into the environment.

This decrease in nozzle pressure leads to an increase in air volume, ensuring proper atomization.

REGULATORY REQUIREMENTS	HVLP AIR CAP
Minimum transfer	No specific requirements
FEATURES	
Maximum nozzle pressure	0.68 bar (10 psi)
Application distance	Greater product transfer by painting at a shorter distance from the piece (12 – 15 cm)
Product output flow	Lower suction capacity. Product discharge at 4600 HVLP 1.3 to 2 bar pressure: 188 g/min (6.6 oz/min).
Air consumption	High air consumption: 465 L/min (16.4 cfm) on the 4600 HVLP at 2 bar (29 psi) pressure.
APPLICATION	RIMERS AND BASECOATS

EPA (Enviromental Protection Agency)

The U.S. Environmental Protection Agency, through the Clean Air Act, establishes a series of regulations focused on reducing emissions of toxic particles into the environment.

Part of these regulations governs the characteristics and specifications of professional painting equipment.

REGULATORY REQUIREMENTS	EPA AIR CAP
Minimum transfer	65%
FEATURES	
Maximum nozzle pressure	No specific requirements
Product output flow	Greater suction capacity. Product removal at 4600 BASE 1.3 to 2 bar pressure: 215 g/min (7.6 oz/min).
Air consumption	Sustained air consumption: 280 L/min (9.88 cfm) in the 4600 BASE at 2 bar (29 psi) pressure.
APPLICATION	PRIMERS, SINGLE-STAGES, BASECOATS AND CLEARCOATS

Medium Pressure

These nozzles are not governed by any specific regulations. This does not mean they are inferior to others in terms of transfer, suction capacity, or finish.

It simply means their design is not regulated by any specific standards.

REGULATORY REQUIREMENTS	MEDIUM PRESSURE AIR CAP
Minimum transfer	No specific requirements
FEATURES	
Maximum nozzle pressure	No specific requirements
Product output flow	Higher air pressure at the nozzle. Versatile. Suitable for working at high pressures.
Air consumption	Low air consumption: 240 L/min (8.5 cfm) at nozzle 96+ at 2 bar (29 psi) pressure.
APPLICATION	PRIMERS, SINGLE-STAGES, BASECOATS AND CLEARCOATS

Air caps

SAGOLA SPRAY GUNS	PAINTING SYSTEMS							
	EPA SYSTEM			HVLP SYSTEM		MEDIUM PRESSURE SYSTEM		
Sagola 4600	DVR BASE	DVR CLEAR	DVR CLEAR PRO	DVR HVLP				
3600 XPT	XPT BASE	XPT CLEAR		XPT HVLP				
3300 GTO	GTO EPA	GTO EVO	GTO TECH	GTO HVLP		3300 62S	3300 64S	
3400 Compact Gravity	Compact BASE	Compact CLEAR		Compact HVLP		Compact TECH		
X 4100 series Gravity	XT01			XT03		96+	64S	
X 4100 series Pressure	XT01B	SUPER VIT		XT03	3030	777	765	
X 4100 series Suction	XT01					96+		
Mini Xtreme Pressure	MINI VIT	MINI EPA		MINI HVLP				
2100 XD	XD TECH							
Classic Pro XD	21 EPA			HVLP		25	36	28
Classic Lux						40	41	42
Junior G						Junior G air cap		

Nozzle Air Consumption: Why Is It Important?

Air consumption indicates the amount of air a nozzle delivers at a given pressure. At Sagola, we express it in **L/min (cfm)** and use **2 bares (29 psi) as the reference dynamic pressure**.

The larger the **nozzle orifices**, the more air we will need to maintain that 2 bar pressure. Therefore, HVLP nozzles with larger orifices also have higher air consumption.

HVLP Air cap

EPA Air cap

This higher air consumption is directly related to the **characteristics** of our **compressor**. The higher the air consumption, the more of our air resources we will be using.

As a general and approximate rule, 1 HP of our compressor is capable of supplying about 100 L/min (3.5 cfm) of air at 2 bar. Therefore, to feed an **HVLP nozzle** with an air consumption of 450 L/min (15.9 cfm) at 2 bar pressure; We will need at least a **5 HP compressor**.

Air caps

The **aircap model** is vital to achieve the desired results. The type of product we are going to apply and the application system we are going to use must both be taken into account when selecting an aircap. We will obtain the desired spray by correctly combining the aircap with the correct nozzle and needle kit, and a proper air supply.

High transfer air caps

AIR CAP	Spraygun model	Painting System	Recommended application	Nozzle (mm.)	Air consumption	Code
DVR CLEAR PRO	SAGOLA 4600 DFT 4600 HEX	EPA	Quick Drying clearcoats. Single Stage. Ultra high gloss finishes	1.2 - 1.4	315 L/min. 11.12 cfm	56418760
DVR CLEAR		EPA	HS Clearcoats and Single Stage. OEM finishes	1.2 - 1.4	295 L/min. 10.42 cfm	56418762
DVR BASE		EPA	Special Waterborne and Solvent basecoats. Ease of application at low pressure	1.2 XS - 1.4	280 L/min. 9.88 cfm	56418759
DVR HVLP		HVLP	Special colour waterborne and solvent basecoat. Minimum mist. Maximum savings and perfect paint uniformity.	1.2 - 1.4	450 L/min. 15.89 cfm	56418761
Compact BASE	3400 COMPACT Gravity	EPA	Special Spot Repair. UV fillers. Parts coating. Basecoats, clearcoats and waterborne products	0.8 - 1.2	190 L/min. 6.71 cfm	56418524
Compact TECH		EPA	Low viscosity products and feathering. Lines painting	0.6 - 1.0	52 L/min. 11.12 cfm	56418598
Compact HVLP	3400 COMPACT Gravity	HVLP	Special Spot Repair. Waterborne and Solvent basecoats	1.0 - 1.2	325 L/min. 11.48 cfm	56418526
Compact CLEAR	MINI XTREME Pressure	EPA	Basecoats and clearcoats	0.8 - 1.2	190 L/min. 6.71 cfm	56418525
MINI VIT	MINI XTREME Pressure	EPA	High application speed. Wide fan patterns	0.8 - 1.4	375 L/min. 13.24 cfm	56418560
XPT BASE	3600 XPT	EPA	Special waterborne and solvent-basecoat. Colour. High atomization.	1.2 - 1.4	285 L/min. 10.06 cfm	56418774
XPT CLEAR		EPA	HS Clearcoats and Single Stage	1.2 - 1.4	285 L/min. 10.06 cfm	56418776
XPT HVLP		HVLP	Minimal overspray. Maximum savings and uniformity with basecoats.	1.2 - 1.4	360 L/min. 12.71 cfm	56418775
GTO EPA	3300 GTO	EPA	Sanding fillers. Minimum air consumption	1.4 - 1.8	250 L/min. 8.8 cfm	56418645
GTO EVO		EPA	Quick drying fillers. Wet on wet fillers	1.3 - 1.6	255 L/min. 9.01 cfm	56418558
GTO HVLP		HVLP	Fillers. Minimum mist and maximum savings.	1.4 - 1.8	360 L/min. 12.71 cfm	56418552
GTO 64 S		EPA	High thickness fillers	2.2 - 2.5	310 L/min. 10.95 cfm	56418646
GTO 62 S		EPA	Putties	2.8	270 L/min. 9.53 cfm	56418647
XD TECH	2100 XD	EPA	Finishes, fillers and primers	1.3 - 1.4	225 L/min. 7.95 cfm	56418639
CLASSIC 21 EPA	CLASSIC PRO XD	EPA	Finishes, fillers and primers	1.3 - 1.8	225 L/min. 7.95 cfm	56418639
CLASSIC HVLP		HVLP	Fillers and primers. Minimum mist and maximum savings.	1.3 - 1.8	355 L/min. 11.54 cfm	56418643

Air caps

High transfer air caps

AIRCAP	Spraygun model	Painting System	Recommended application	Nozzle (mm.)	Air consumption	Code
XT01	X 4100 SERIES Gravity/ Suction	EPA	Clearcoats, enamels. Basecoats and metallic finishes. High performance	1.3 - 1.8	235 L/min. / 8,30 cfm	56418565
XT01 B	X 4100 SERIES Pressure	EPA	High gloss finish	0.8 - 1.4	295 L/min. / 10,42 cfm	56418564
SUPER VIT		EPA	Primers and fillers	1.0 - 1.4	380 L/min. / 13,42 cfm	56418702
XT03		HVLP	Minimum mist. Maximum atomization quality.	0.8 - 1.6	465 L/min. / 16,42 cfm	56418566
3030		HVLP	Finishes and primers. Minimum mist.	1.2 - 2.2	514 L/min. / 18,15 cfm	56418572

Medium pressure air caps

AIR CAP	Spraygun model	Painting System	Recommended application	Nozzle (mm.)	Air consumption	Code
96	X 4100 SERIES Gravity/ Suction	Medium Pressure	High-quality finishes. High application speed.	1.3 - 1.8	250 L/min. / 8.83 cfm	56418573
64 S		Medium Pressure	High micron thickness. Putties	2.2	305 L/min. / 10.77 cfm	56418575
765	X 4100 SERIES Pressure	Medium Pressure	Quality finishes. Wide fan patters	1.0 - 1.8	315 L/min. / 11.12 cfm	56418571
777		Medium Pressure	High gloss finishes. Basecoats. High atomization power	0.8 - 1.4	345 L/min. / 12.18 cfm	56418576
25	CLASSIC PRO XD	Medium Pressure	Primers. High thickness	2.0	155 L/min. / 5.47 cfm	56418640
36		Medium Pressure	Intermediate layers. High thicknesses	2.5	205 L/min. / 7.24 cfm	56418642
28		Medium Pressure	High viscosity. Gun-applied putties. Forge effect	2.8	240 L/min. / 8.48 cfm	56418641
05	475 XTECH	Medium Pressure	Feathering	0.5 - 0.8	100 L/min. / 3.53 cfm	56418246
10		Medium Pressure	Retouches. Smart repairs	1.0	110 L/min. / 3.88 cfm	56418247
R5		Medium Pressure	High precision round jet. Feathering and fine lettering	0.5	45 L/min. / 1.59 cfm	56418271

Nozzle and Needle Kits

NOZZLE AND NEEDLE KITS

Spraygun	Code	Description
Serie 46 Sagola 4600	10011164	1.20 XS Nozzle and Needle Kit
	10011137	1.20 Nozzle and Needle Kit
	10011145	1.20 XL Nozzle and Needle Kit
	10011138	1.30 Nozzle and Needle Kit
	10011139	1.30 XL Nozzle and Needle Kit
	10011140	1.40 Nozzle and Needle Kit
Serie 46 Sagola 4600 HEX	10011153	1.20 HEX Nozzle and Needle Kit
	10011165	1.20 XL HEX Nozzle and Needle Kit
	10011154	1.30 HEX Nozzle and Needle Kit
Serie 41 X 4100 Series Gravity Suction Pressure 4100 Xtreme Gravity	10011251	0.80 Nozzle and Needle Kit
	10011252	1.00 Nozzle and Needle Kit
	10011253	1.20 Nozzle and Needle Kit
	10011121	1.30 Nozzle and Needle Kit
	10011122	1.40 Nozzle and Needle Kit
	10011123	1.60 Nozzle and Needle Kit
	10011124	1.80 Nozzle and Needle Kit
	10011125	2.00 Nozzle and Needle Kit
	10011126	2.20 Nozzle and Needle Kit
	10011127	2.50 Nozzle and Needle Kit
	10011128	2.80 Nozzle and Needle Kit
Serie 40 4100 Xtreme Suction Pressure	10011100	0.80 Nozzle and Needle Kit
	10011101	1.00 Nozzle and Needle Kit
	10011102	1.20 Nozzle and Needle Kit
	10011103	1.30 Nozzle and Needle Kit
	10011104	1.40 Nozzle and Needle Kit
	10011106	1.60 Nozzle and Needle Kit
	10011107	1.80 Nozzle and Needle Kit
	10011119	2.00 Nozzle and Needle Kit
	10011108	2.20 Nozzle and Needle Kit
	10011109	2.50 Nozzle and Needle Kit
	10011120	2.80 Nozzle and Needle Kit
Serie Compact 3400 Compact Mini Xtreme Pressure	10011200	0.80 Nozzle and Needle Kit
	10011201	1.00 Nozzle and Needle Kit
	10011202	1.20 Nozzle and Needle Kit
	10011203	1.30 Nozzle and Needle Kit
	10011204	1.40 Nozzle and Needle Kit
	10011205	1.60 Nozzle and Needle Kit
	10011206	1.80 Nozzle and Needle Kit
Serie 36 3600 XPT	10010163	1.20 Nozzle and Needle Kit
	10010164	1.30 Nozzle and Needle Kit
	10010165	1.40 Nozzle and Needle Kit

Spraygun	Code	Description
Serie 3300 3300 GTO	10011187	1.00 Nozzle and Needle Kit
	10011180	1.20 Nozzle and Needle Kit
	10011191	1.30 Nozzle and Needle Kit
	10011181	1.40 Nozzle and Needle Kit
	10011182	1.60 Nozzle and Needle Kit
	10011183	1.80 Nozzle and Needle Kit
	10011188	2.00 Nozzle and Needle Kit
	10011192	2.20 Nozzle and Needle Kit
	10011189	2.50 Nozzle and Needle Kit
	10011190	2.80 Nozzle and Needle Kit
Serie Classic 2100 XD Classic Pro XD Gravity Suction	10011293	1.30 Nozzle and Needle Kit
	10011254	1.40 Nozzle and Needle Kit
	10011255	1.60 Nozzle and Needle Kit
	10011256	1.80 Nozzle and Needle Kit
	10011257	2.00 Nozzle and Needle Kit
	10011258	2.20 Nozzle and Needle Kit
	10011259	2.50 Nozzle and Needle Kit
	10011260	2.80 Nozzle and Needle Kit
Serie 475 475 XTech	10011198	1.00 Nozzle and Needle Kit
	10011197	0.80 Nozzle and Needle Kit
	10011195	0.50 Nozzle and Needle Kit
	10011196	0.50 CHR Nozzle and Needle Kit
Serie Lux Classic Lux Gravity	10011380	1.40 Nozzle and Needle Kit + 40 Air cap
	10011370	1.60 Nozzle and Needle Kit + 40 Air cap
	10011371	1.80 Nozzle and Needle Kit + 40 Air cap
	10011372	2.00 Nozzle and Needle Kit + 41 Air cap
	10011373	2.50 Nozzle and Needle Kit + 42 Air cap
Classic Lux Suction	10011374	1.60 Nozzle and Needle Kit + 38 Air cap
	10011375	1.80 Nozzle and Needle Kit + 39 Air cap
474	10011376	0.80 Nozzle and Needle Kit
	10011377	1.00 Nozzle and Needle Kit
Junior G	49000431	1.40 Nozzle and Needle Kit
	49000432	1.60 Nozzle and Needle Kit
	49000433	1.80 Nozzle and Needle Kit
518 Pro	10011199	2.00 Nozzle and Needle Kit

Spray guns accessories

Digital

RC3 Flow regulator with pressure gauge

Digital air pressure reading for the gun. Version in bar and psi. High-quality, highly accurate, sealed pressure gauge.

Version	Code
bar	40000345
psi	40000346

RC1 Flow regulator with pressure gauge

Aluminium, very light. Ideal for high transfer HVLP and EPA spray guns. Red to green pressure scale (green within provisions of regulations). Assembled in seconds with hermetic hand tightening.

Code
56418020

High precision flow regulator

High precision air-flow regulator kit. Solvent-proof gaskets. Suitable for SAGOLA 4600 digital. Recommended for finishing spray guns.

Code
56418519

RC2 Flow regulator with pressure gauge

Pressure gauge flow regulator. Exact input pressure gun.High quality gauge green scale for high transfer guns.

Code
40000335

Pressurizer kit

For gravity spray guns. Gravity cup pressure kit for high viscosity materials spraying. Non-return valve included.

Code
56418513

4600 HVLP Tester

Pressure checker for HVLP aircaps (SAGOLA 4600 spray gun model).

Code
10010051

SP2 and SP1 Magnetic Stands

Magnetic stand for 1 (SP1) or 2 (SP2) spray guns. Solvent-proof paint. Supports PPS type adapters. Maximum robustness. High holding power due to two powerful magnets.

Version	Code
SP 1	40000245
SP 2	40000246

UV Protective Cap

Protective cap kits for Sagola spray guns and opaque containers for ultraviolet products.

Version	Code
Cap + 650 ml. cup 3300 GTO / 3600 XPT	56418786
Cap + 650 ml. cup 4600 DFT / 4600 HEX	56418787
Cap + 650 ml. cup 3400 Compact / Mini	56418788
Cap + 125 ml. cup 3400 Compact / Mini	56418789

Cleaning kit

Complete cleaning set, including one brush for outside cleaning, and rods of different sizes for all the inner paths of the spray gun. Supplied in a practical show case.

Code
40000086

Lubricant grease

Natural grease, specially made for spray guns and painting equipments moving parts lubrication. High consistency, even under extreme temperatures. Long lasting, it doesn't lose properties over the time.

Code
56418589

Ford 4 - Viscosimeter

Viscosity dip cup, made of polyamide (solvent resistant) with metal outlet hole (brass).

Code
56418001

Spray guns accessories

GRAVITY CUPS

Description	Spray gun model	Code
650 ml. Gravity cup	SAGOLA 4600 DFT/HEX	56418432
1,000 ml. Gravity cup		56418505
650 ml. Black Gravity cup	SAGOLA 4600 / 3300 GTO	56418433
650 ml. Gravity cup	X 4100 SERIES 3600 XPT 3300 GTO CLASSIC PRO XD	56418084
650 ml. Gravity cup (without product filter)		56418085
1.000 ml. Gravity cup (metallic)		56418082
650 ml. Gravity cup	CLASSIC LUX	56418420
125 ml. Gravity cup	3400 COMPACT Mini Xtreme 475 XTECH	56418081
125 ml. Black Gravity cup		56418099
200 ml. Gravity cup		56418079
500 ml. Gravity cup	3400 COMPACT / Mini	56418080
600 ml. Gravity cup	JUNIOR G	49000430
120 ml. Gravity cup	474	56418431

PRODUCT FILTERS FOR GRAVITY DEPOSITS

Description	Spray gun model	Code
Gravity deposit product filter 650 ml. (10 units)	SAGOLA 4600 DFT/HEX	56418438
Gravity deposit product filter 650 ml. (10 units)	X 4100 Series / 3600 XPT 3300 / Classic PRO XD	56418017
Gravity deposit product filter 500 ml. (10 units)	3400 COMPACT / Mini	56418059
Gravity deposit product filter 125 ml. (6 units)	3400 COMPACT / Mini 475 XTech	56418061
Gravity deposit product filter 120 ml. (5 units)	474	56418479

ADAPTATION COUPLINGS FOR DISPOSABLE PPS CUPS

Description	Spray gun model	Code
3M PPS / SAGOLA DPC Adaptation coupling	SAGOLA 4600 DFT/HEX	55711607
3M PPS 2.0 Adaptation coupling		55711626
MIPA / CARWOX Adaptation coupling		55711617
GERSON / NORTON Adaptation coupling		55711609
FLEXI CUP Adaptation coupling		55711610
DEVILBISS / DEKUPS Adaptation coupling		55711619
SATA RPS Adaptation coupling		55711621
COLAD Adaptation coupling		55711624
3M PPS / SAGOLA DPC Adaptation coupling	3400 COMPACT 3600 XPT 3300 GTO X 4100 Series Classic PRO XD	55711612
3M PPS 2.0 Adaptation coupling		55711627
MIPA / CARWOX Adaptation coupling		55711616
GERSON / NORTON Adaptation coupling		55711614
FLEXI CUP Adaptation coupling		55711615
DEVILBISS / DEKUPS Adaptation coupling		55711618
SATA RPS Adaptation coupling		55711620
COLAD Adaptation coupling		55711623

Spray guns accessories

AIR VALVES AND PACKING GLANDS

Description	Spray gun model	Code
Air valve Kit (standard version)	SAGOLA 4600	56418634
Air valve Kit (digital version)		56418636
Air valve Kit	3400 COMPACT / Mini	56418644
Air valve Kit	X 4100 SERIES / 3600	56418669
Air valve Kit	3300 GTO	56418664
Air valve Kit	2100 XD	56418777
Air valve Kit	CLASSIC PRO XD	56418481
Air valve Kit	CLASSIC LUX	56418715
Air valve Kit	JUNIOR G	49000422
Air valve Kit	SAGOLA 474	56418449
Paint Packing nut	SAGOLA 4600 / X 4100	56411616
Paint Packing nut Kit	3400 COMPACT / Mini	56418034
Paint Packing nut	3600 XPT / 3300 GTO	57212211
Paint Packing nut Kit	2100 XD CLASSIC PRO XD / LUX	56411619
Paint Packing nut Kit	JUNIOR G	49000425
Paint Packing nut Kit	SAGOLA 474	56418452

OTHER ACCESSORIES

Description	Code
Briefcase for sprayguns	10141750
Spraygun locker	70000010

04

Airbrush and Touch-Up's

Your Airbrush project is important to us.
We take care of the little things, so you don't have to.
Sagola Airbrushes are designed for:

> Feathering
> Precise Part Touch Up's
> Part Marking

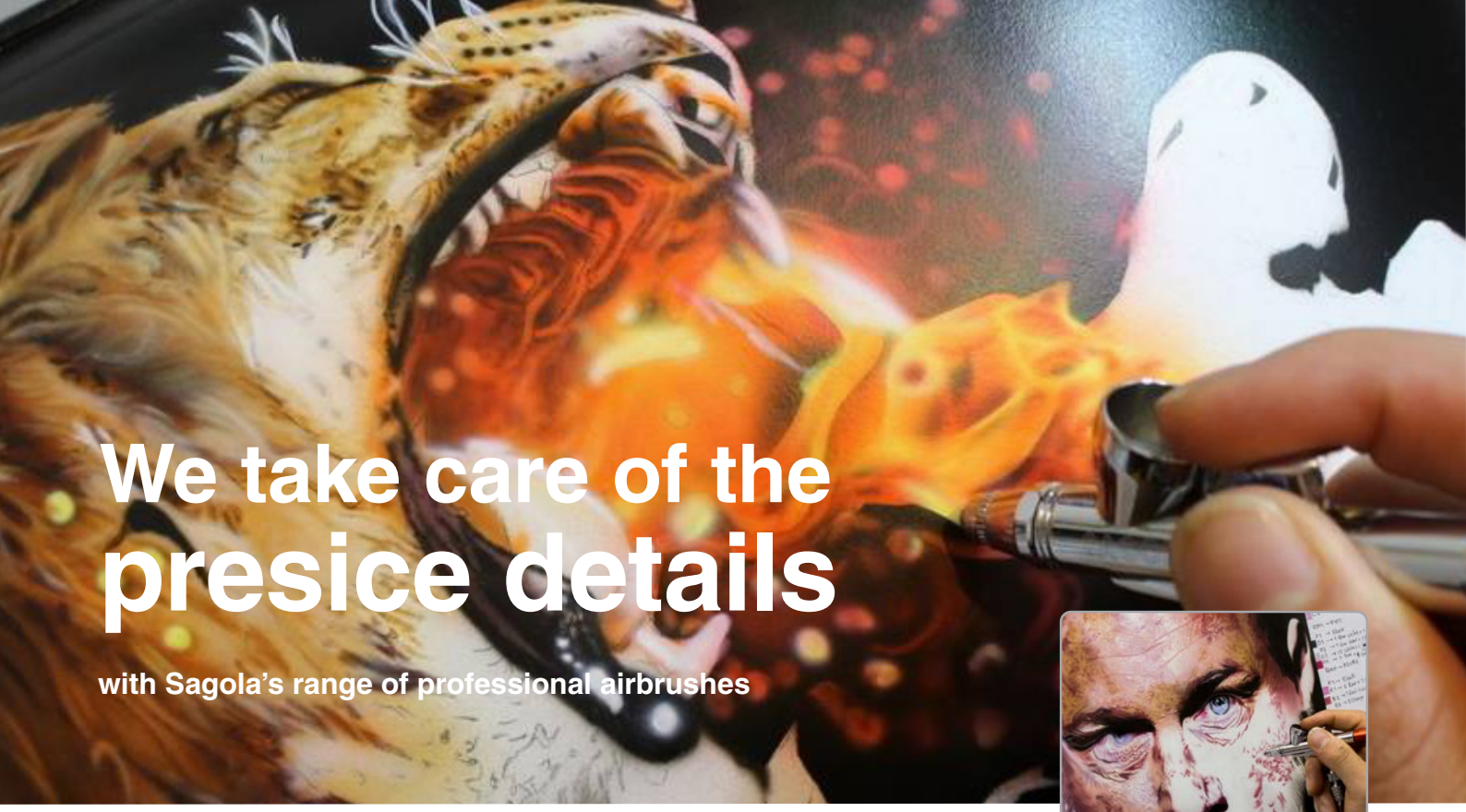

We take care of the presice details

with Sagola's range of professional airbrushes

XTech Airbrushes

SAGOLA's XTech Airbrushes is engineered to meet the demands of the discerning airbrush artist and professional painter.

Airbrushes for automotive, fine arts, bodypaint, tanning, illustration, make-up, model making, confectionery, temporary tattoo - tattoo, textiles, nail decoration...

The range is divided in 5 different models, one for each type of application.

- Needle closing and packing made of Teflon.
- Highly precise and smooth air and product valve.
- Working pressure 15/30 psi 1/2 bar
- Air inlet connection: 1/8" male

XTech 100 Airbrush

Sagola XTech 100 airbrush. Dual action professional airbrush and gravity feed paint system.

0.2 mm. neddle and nozzle set up, that offers a superfine spraying, for the highest precision.

0.9 ml. deposit to use with small quantity of paint. Ideal for quick colour changes.

Version	Code
Ø 0.2 **XTech 100**	17410501

XTech 200 Airbrush

Sagola XTech 200 airbrush. Dual action professional airbrush and gravity feed paint system.

0.2 and 0.3 mm. neddle and nozzles, that offer a fine spraying and a high precision.

1.5 ml. deposit to use with medium amounts of paint. Easy to clean. Ideal for quick colour changes.

Version	Code
Ø 0.2 **XTech 200**	17410601
Ø 0.3 **XTech 200**	17410602

XTech Airbrushes

XTech 300 Airbrush

Sagola XTech 300 airbrush. Dual action professional airbrush and gravity feed paint system.

0.3 mm. neddle and nozzle set up, that offers a fine pulverization and a good precision.

5 ml. deposit to use any paint quantity, but maintaining the advantage of an easy cleaning and colour change.

Version	Code
Ø 0.3 **XTech 300**	17410701

XTech 400 Airbrush

Sagola XTech 400 airbrush. Dual action professional airbrush and gravity feed paint system.

0.3 mm. neddle and nozzle set up, that offers a fine pulverization and a good precision. Ideal for murals for a bit thicker colors.

9 ml. deposit to use any paint quantity, but maintaining the advantage of an easy cleaning and colour change.

Version	Code
Ø 0.3 **XTech 400**	17410801

XTech 500 Airbrush

Sagola XTech 500 airbrush. Dual action professional airbrush and suction feed paint system.

0.3 and 0.5 mm. neddle and nozzles, that offer a fine spraying from a high precision to a large spray pattern.

22 ml. suction deposit with fast change system. Ideal for changing color in an instant.

Ideal for projects such as T-shirts, Remote control cars.

Version	Code
Ø 0.3 **XTech 500**	17410901
Ø 0.5 **XTech 500**	17410902

Accessories

Sagola's offers a comprehensive range of accessories for the XTech range of airbrushes. New cups with different capacities, hoses, adapters, regulators and accessories to ensure maximum performance.

Glass Paint Jars

Glass paint jars with cover. 22 ml. and 50 ml. versions. The 22 ml. version may include adapter to XTech 500.

Code	Version
40000500	22 ml. deposit with cover and adapter
40000501	22 ml. deposit with cover
40000504	50 ml. deposit with cover

Plastic Paint Jars

Plastic paint jars with cover and adapter to XTech 500.

Code	Version
40000503	60 ml. deposit with cover and adapter
40000502	100 ml. deposit with cover and adapter

Lateral metallic cups

With adapter to XTech 500.
7 ml. capacity

With adapter to XTech 400.
9 ml. capacity

Code	Version
52810001	Lateral metallic cup for XTech 500
40000505	Lateral metallic cup for XTech 400

Air hose

Length 3 meters.
Textile material.

Code	Version
56414203	3 m. Air hose 1/8" F - 1/8" F
56414209	3 m. Air hose 1/4" F - 1/8" F

Plug + regulator Kit

Code	Version
11011603	BSPP 1/8" M - F

Multi-airbrush table supports

Code	Version
40000344	4 airbrushes table support (in line)
40000242	4 airbrushes table support

Plug + connector Kit

Code	Version
11011601	BSPP 1/8" M - F
11011602	1/8" F - Ø 4 mm. BSPP "Barb"

XTech Airbrushes

Sagola XTech 100 Airbrush spare parts

SAGOLA is synonymous with quality and service. For this reason, SAGOLA provides a comprehensive spare parts and service guarantee, ensuring the proper maintenance of all its products, even those sold more than 10 years ago.
To ensure the best possible results and a high-quality finish, the spray gun must be thoroughly cleaned after each use and periodically checked for damaged or worn components. Any damaged or worn parts must be replaced.

Latest updated version of the exploded view Sagola XTech 100 Airbrush

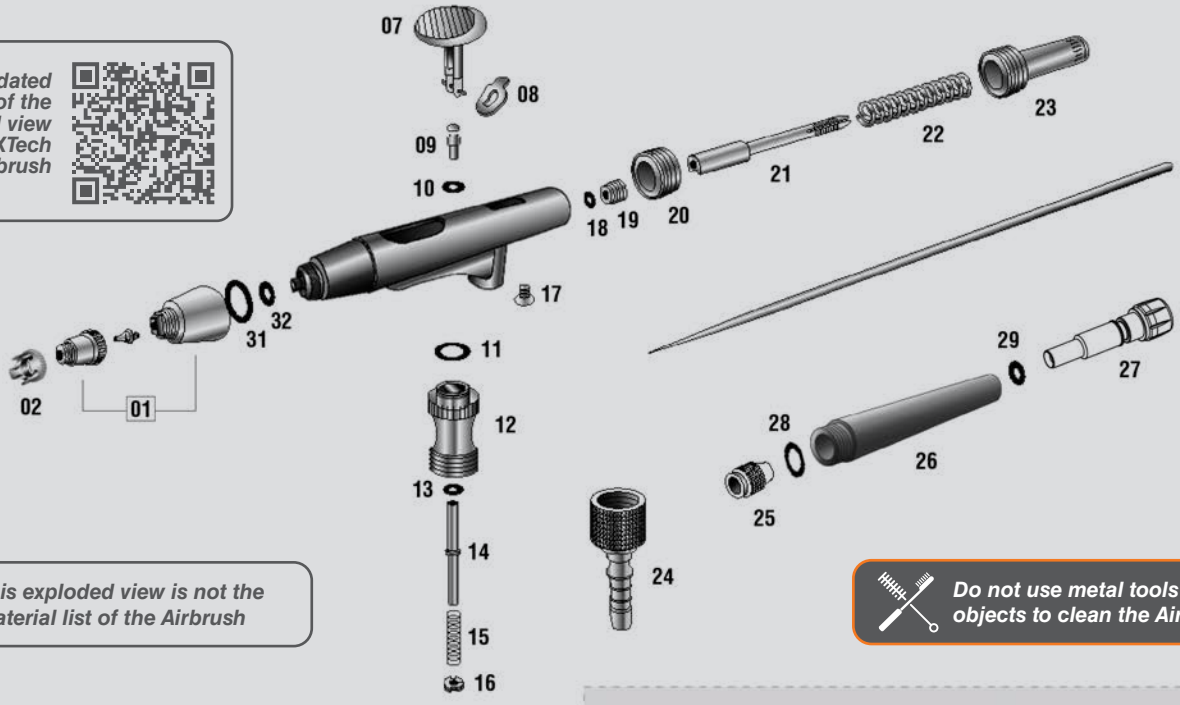

This exploded view is not the material list of the Airbrush

Do not use metal tools or objects to clean the Airbrush

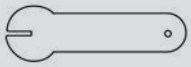

33

LLAVE MONTAJE
KEY ASSEMBLY

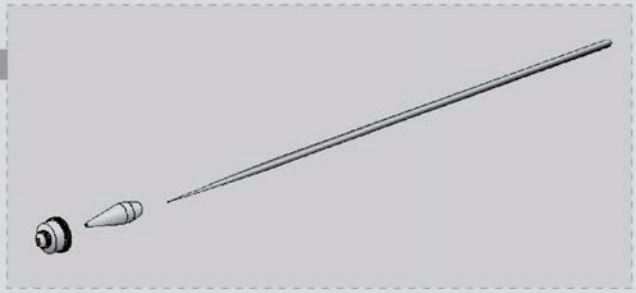

SPARE PARTS — XTECH 100

No.	Code	Description
1	49000586	0.20 Nozzle and needle Kit + aircap
2	52710051	Airbrush head protector
7	49000591	Trigger
8	49000592	Reverse run Lever
9	49000593	Switch piston
10	49000594	Pulsator closing O-ring
11	49000595	Air valve closing O-ring
12	49000596	Air valve guide box
13	49000597	Air valve washer
14	49000598	Air valve shaft
15	49000599	Air valve spring
16	49000600	Air valve washer
17	49000601	Body screw
18	49000602	O-ring closing needle packing screw

SPARE PARTS — XTECH 100

No.	Code	Description
19	49000603	Needle packing screw
20	49000604	Body nut lock
21	49000605	Needle guide box
22	49000606	Needle spring
23	49000607	Needle top spring
24	49000608	Air inlet Kit
25	49000609	Needle lock nut
26	52710912	Body handle
27	57810379	Regulator wheel
28	54250949	O-ring 8.50 x 1.00 nitrile
29	54251019	O-ring 4.00 x 1.20 nitrile
31	49000611	O-ring closing nozzle
32	49000612	O-ring closing needle
33	49000613	Accessory wrench

XTech Airbrushes

Sagola XTech 200 Airbrush spare parts

SAGOLA is synonymous with quality and service. For this reason, SAGOLA provides a comprehensive spare parts and service guarantee, ensuring the proper maintenance of all its products, even those sold more than 10 years ago.
To ensure the best possible results and a high-quality finish, the spray gun must be thoroughly cleaned after each use and periodically checked for damaged or worn components. Any damaged or worn parts must be replaced.

Do not use metal tools or objects to clean the Airbrush

This exploded view is not the material list of the Airbrush

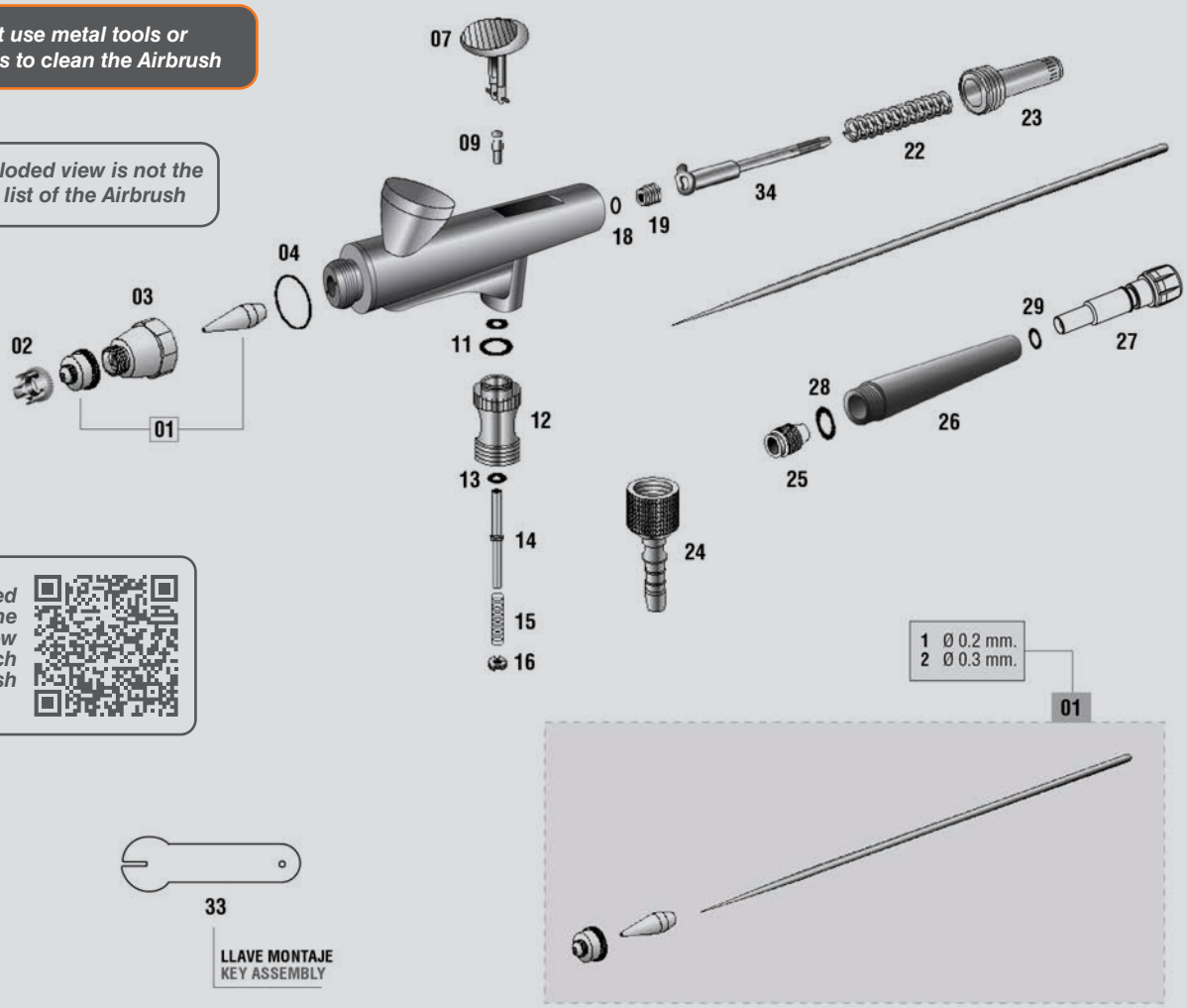

Latest updated version of the exploded view Sagola XTech 200 Airbrush

SPARE PARTS — XTECH 200

No.	Code	Description
01/1	49000583	0.20 Nozzle and needle Kit + aircap
01/2	49000584	0.30 Nozzle and needle Kit + aircap
2	52710051	Airbrush head protector
3	49000588	Aircap nut
4	49000589	O-ring closing aircap
7	49000591	Trigger
9	49000593	Switch piston
11	49000595	Air valve closing O-ring
12	49000596	Air valve guide box
13	49000597	Air valve washer
14	49000598	Air valve shaft
15	49000599	Air valve spring
16	49000600	Air valve washer

SPARE PARTS — XTECH 200

No.	Code	Description
18	49000602	O-ring closing needle packing screw
19	49000603	Needle packing screw
22	49000606	Needle spring
23	49000607	Needle top spring
24	49000608	Air inlet Kit
25	49000609	Needle lock nut
26	52710913	Body handle
27	57810379	Regulator wheel
28	54250949	O-ring 8.50 x 1.00 nitrile
29	54251019	O-ring 4.00 x 1.20 nitrile
33	49000613	Accessory wrench
34	49000755	Needle guide box + Reverse run Lever

XTech Airbrushes

Sagola XTech 300 Airbrush spare parts

SAGOLA is synonymous with quality and service. For this reason, SAGOLA provides a comprehensive spare parts and service guarantee, ensuring the proper maintenance of all its products, even those sold more than 10 years ago.
To ensure the best possible results and a high-quality finish, the spray gun must be thoroughly cleaned after each use and periodically checked for damaged or worn components. Any damaged or worn parts must be replaced.

Do not use metal tools or objects to clean the Airbrush

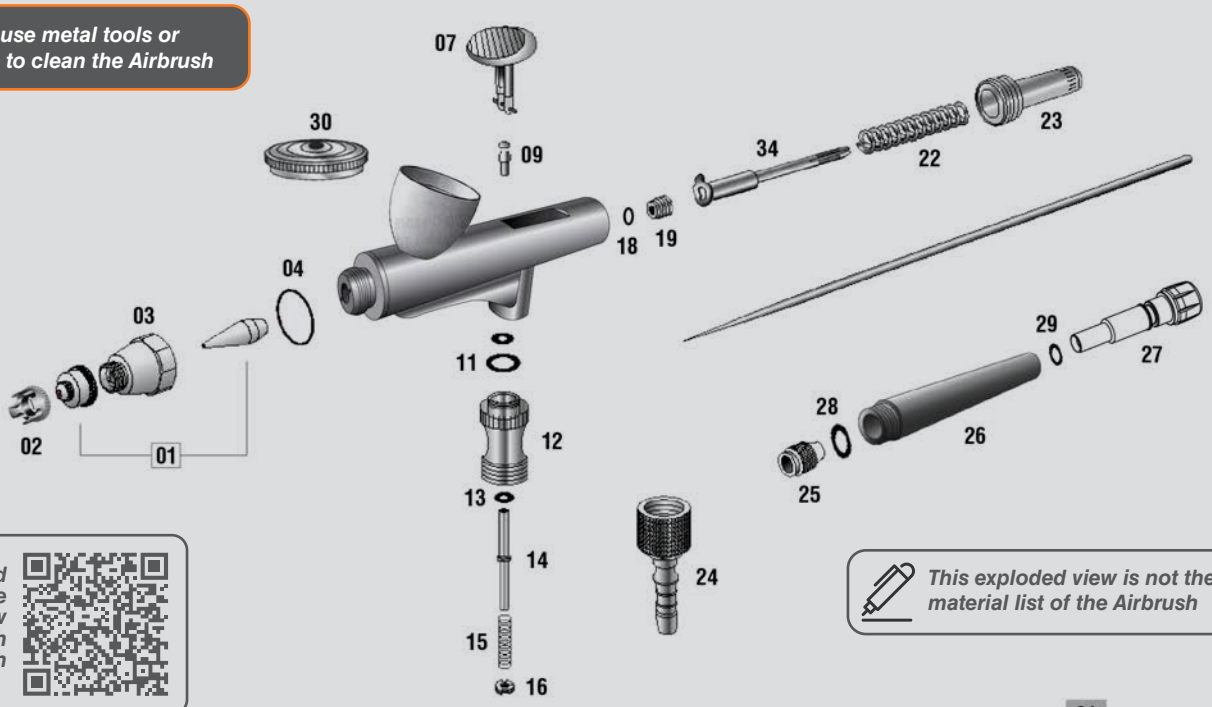

Latest updated version of the exploded view Sagola XTech 300 Airbrush

This exploded view is not the material list of the Airbrush

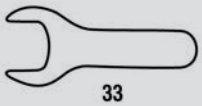

LLAVE MONTAJE
KEY ASSEMBLY

SPARE PARTS — XTECH 300

No.	Code	Description
1	49000584	0.30 Nozzle and needle Kit + aircap
2	52710051	Airbrush head protector
3	49000588	Aircap nut
4	49000589	Aircap closing O-ring
7	49000591	Trigger
9	49000593	Switch piston
11	49000595	Air valve closing O-ring
12	49000596	Air valve guide box
13	49000597	Air valve washer
14	49000598	Air valve shaft
15	49000599	Air valve spring
16	49000600	Air valve washer
17	49000601	Body screw

SPARE PARTS — XTECH 300

No.	Code	Description
18	49000602	O-ring closing needle packing screw
19	49000603	Needle packing screw
22	49000606	Needle spring
23	49000607	Needle top spring
24	49000608	Air inlet Kit
25	49000609	Needle lock nut
26	52710913	Body handle
27	57810379	Regulator wheel
28	54250949	O-ring 8.50 x 1.00 nitrile
29	54251019	O-ring 4.00 x 1.20 nitrile
30	49000758	Cup lid
33	49000613	Accessory wrench
34	49000755	Needle guide box + Reverse run Lever

XTech Airbrushes

Sagola XTech 400 Airbrush spare parts

SAGOLA is synonymous with quality and service. For this reason, SAGOLA provides a comprehensive spare parts and service guarantee, ensuring the proper maintenance of all its products, even those sold more than 10 years ago.
To ensure the best possible results and a high-quality finish, the spray gun must be thoroughly cleaned after each use and periodically checked for damaged or worn components. Any damaged or worn parts must be replaced.

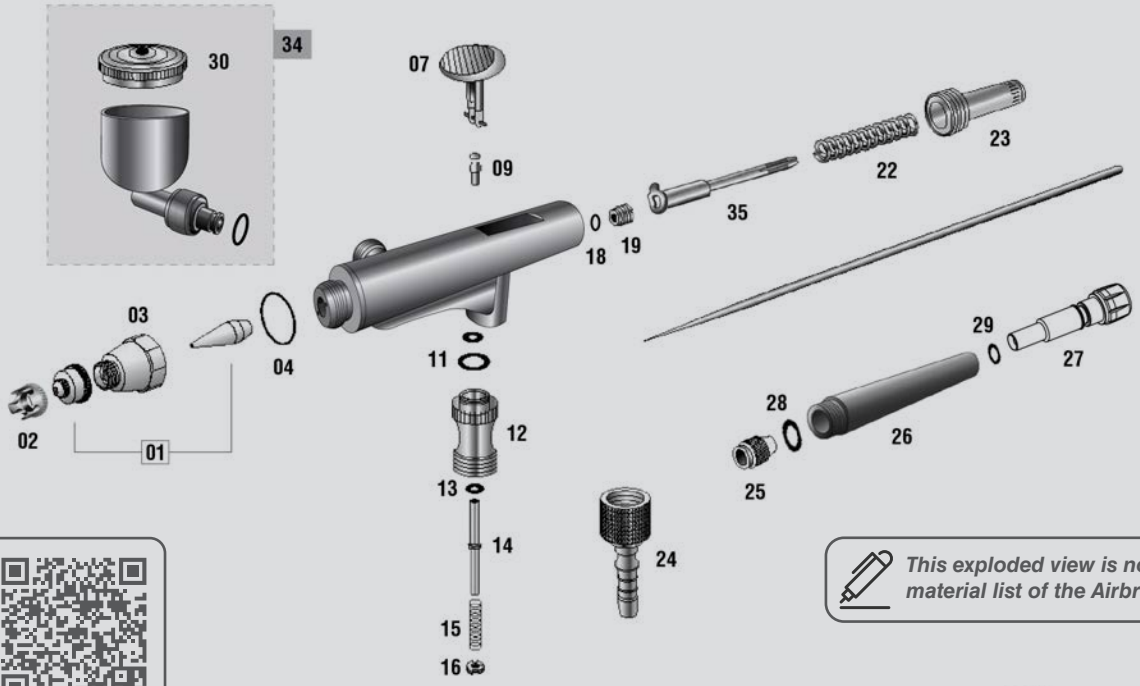

Latest updated version of the exploded view Sagola XTech 400 Airbrush

This exploded view is not the material list of the Airbrush

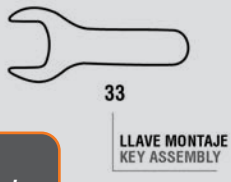

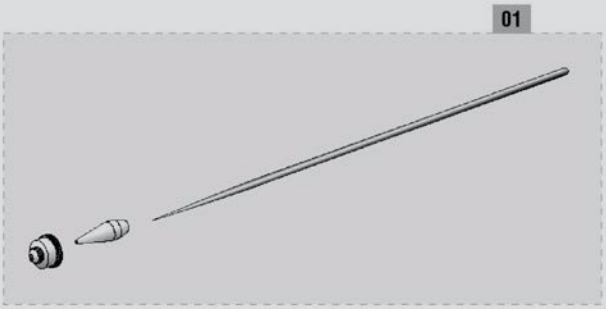

Do not use metal tools or objects to clean the Airbrush

SPARE PARTS — XTECH 400

No.	Code	Description
1	49000584	0.30 Nozzle and needle Kit + aircap
2	52710051	Airbrush head protector
3	49000588	Aircap nut
4	49000589	Aircap closing O-ring
7	49000591	Trigger
9	49000593	Switch piston
11	49000595	Air valve closing O-ring
12	49000596	Air valve guide box
13	49000597	Air valve washer
14	49000598	Air valve shaft
15	49000599	Air valve spring
16	49000600	Air valve washer
18	49000602	O-ring closing needle packing screw

SPARE PARTS — XTECH 400

No.	Code	Description
19	49000603	Needle packing screw
22	49000606	Needle spring
23	49000607	Needle top spring
24	49000608	Air inlet Kit
25	49000609	Needle lock nut
26	52710913	Body handle
27	57810379	Regulator wheel
28	54250949	O-ring 8.50 x 1.00 nitrile
29	54251019	O-ring 4.00 x 1.20 nitrile
30	49000610	Lateral cup lid
33	49000613	Accessory wrench
34	40000505	9 c.c. lateral cup Kit
35	49000755	Needle guide box + Reverse run Lever

XTech Airbrushes

Sagola XTech 500 Airbrush spare parts

SAGOLA is synonymous with quality and service. For this reason, SAGOLA provides a comprehensive spare parts and service guarantee, ensuring the proper maintenance of all its products, even those sold more than 10 years ago.
To ensure the best possible results and a high-quality finish, the spray gun must be thoroughly cleaned after each use and periodically checked for damaged or worn components. Any damaged or worn parts must be replaced.

This exploded view is not the material list of the Airbrush

Do not use metal tools or objects to clean the Airbrush

Latest updated version of the exploded view Sagola XTech 500 Airbrush

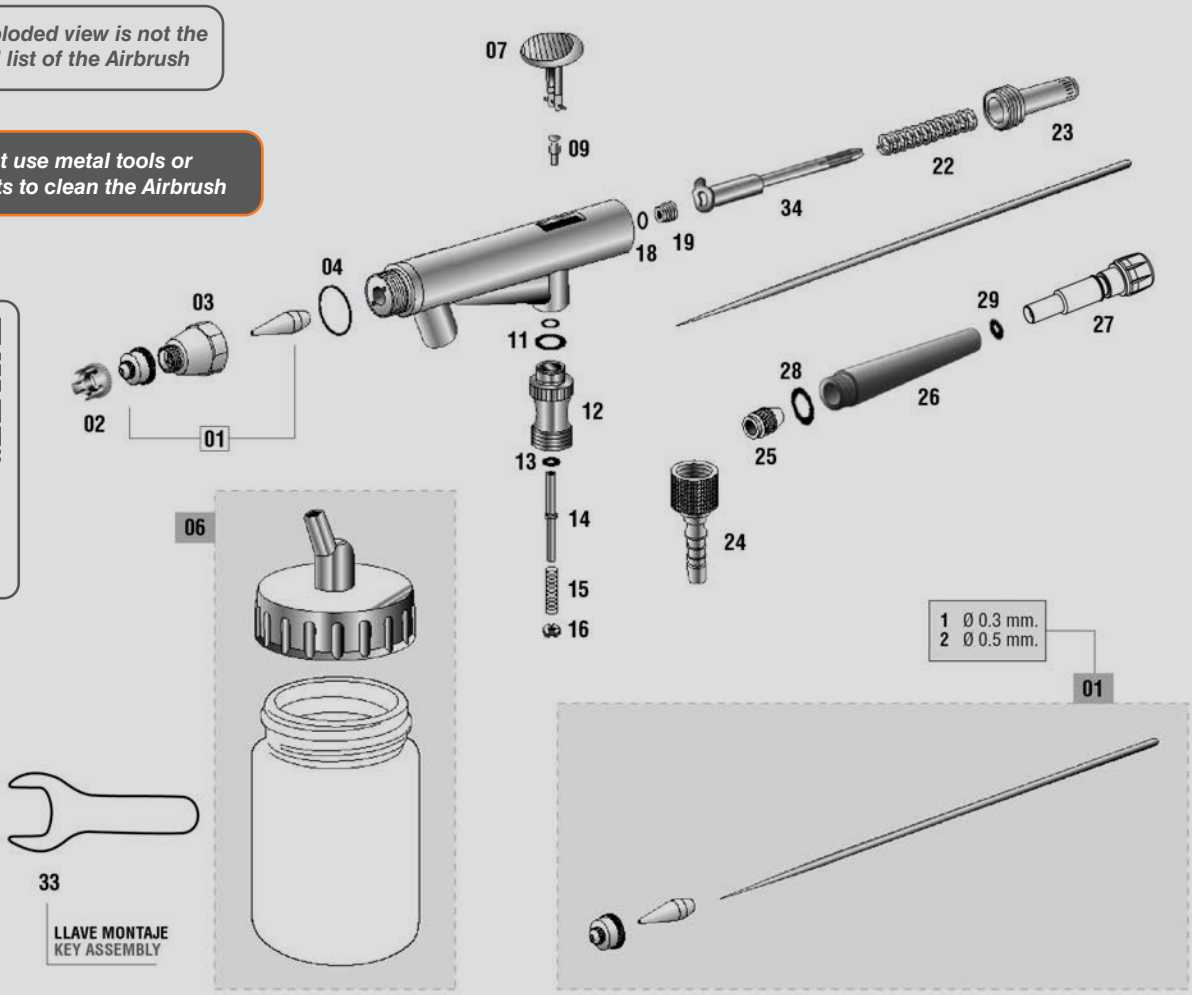

SPARE PARTS — XTECH 500

No.	Code	Description
01/1	49000584	0.30 Nozzle and needle Kit + aircap
01/2	49000585	0.50 Nozzle and needle Kit + aircap
2	52710051	Airbrush head protector
3	49000588	Aircap nut
4	49000589	Aircap closing O-ring
6	40000500	22 c.c. cup Kit + Adapter cover
7	49000591	Trigger
9	49000593	Switch piston
11	49000595	Air valve closing O-ring
12	49000596	Air valve guide box
13	49000597	Air valve washer
14	49000598	Air valve shaft
15	49000599	Air valve spring

SPARE PARTS — XTECH 500

No.	Code	Description
16	49000600	Air valve washer
18	49000602	O-ring closing needle packing screw
19	49000603	Needle packing screw
22	49000606	Needle spring
23	49000607	Needle top spring
24	49000608	Air inlet Kit
25	49000609	Needle lock nut
26	52710913	Body handle
27	57810379	Regulator wheel
28	54250949	O-ring 8.50 x 1.00 nitrile
29	54251019	O-ring 4.00 x 1.20 nitrile
33	49000613	Accessory wrench
34	49000755	Needle guide box + Reverse run Lever

CP Compressors

CP 2000

CP 1000

CP compressors have been specifically designed for use with the XTech range of airbrushes. Compact, powerful and with high reliability.

Both models incorporate a filter with an air outlet regulator and a automatic stop switch.

The sound level is minimal, with a maximum of 47 dB. They are ultra-silent.

Single cylinder compressor (CP1000) and two-cylinder compressor (CP2000). Minimum maintenance.

REGULATIONS:
2006/42/CE
EN 1012-1:2010, EN 60335-1:2002, A11:2004, A1:2004, A12:2006, A2:2006, A13:2008, A14:2010, A15:2011, EN 62233:2008

TECHNICAL DATA

CP COMPRESSORS

Compressor model	CP2000		CP1000	
Weight	10.7 Kg	23.59 lbs	5.8 Kg.	12.79 lbs
Dimensions	35 x 14 x 36 cm.	12.2 x 5.3 x 14.1”	31 x 13.5 x 36 cm.	12.2 x 5.3 x 14.1”
Power	1/4 HP		1/6 HP	
Air tank	Double piston compressor 3.5 L (118.3 fl oz)		Single piston compressor 3 L (101.4 fl oz)	
Speed	1,450 - 1,700 r.p.m.		1,450 - 1,700 r.p.m.	
Air flow	35 - 40 L/min.	1.2 - 1.4 cfm	20 - 23 L/min.	0.7 - 0.8 cfm
Electric switch	P. “0”: OFF P. “I”: Auto Start at less than 3 bar / 43.5 psi P. “II”: Maximum pressure 6 bar / 87 psi. No stops.		Auto start: Auto Start at less than 3 bar / 43.5 psi Auto stop: Auto power off at 4 bar / 58 psi	
Pressure regulator	0 - 10 bar	0 - 145 psi	0 - 7 bar	0 - 102 psi
Noise level	47 dB		47 dB	

VERSIONS

Description	Code
CP 2000 Compressor UE 220 - 240 V / 50 Hz	**10620801**
CP 2000 Compressor US 110 - 130 V / 60 Hz	**10620802**
CP 1000 Compressor UE 220 - 240 V / 50 Hz	**10620701**
CP 1000 Compressor US 110 - 130 V / 60 Hz	**10620702**

Premium 3800 case

Complete spray design equipment kit. The two star products of Sagola range for the professional airbrush with all accessories come together in a practical case.

Equipped with the 475 XTech gravity spraygun with R5 aircap for maximum precision in the smallest fades, fluid nozzle Ø 0.5 mm., air flow regulator and a maintenance whrench.

XTech 500 high precision double effect airbrush with 22 ml. suction deposit.

Includes high quality braided air hose for airbrushes.

TECHNICAL DATA		PREMIUM 3800
Full case weight	3 Kilograms	6.6 lbs
Case dimensions	40 x 35 x 8 cm.	15.7 x 13.8 x 3.1 "
475 XTech spraygun features	see page 44	
XTech 500 airbrush features	see page 121	

Description	Code
Premium 3800 case	25410502

Contents of the Premium 3800 Case kit

Each Sagola Premium 3800 is supplied with:

- Transport case.
- 475 XTech gravity spraygun with R5 aircap and fluid nozzle Ø 0.5 mm.
- XTech 500 airbrush with suction deposit.
- Quick plug for gravity gun.
- 3 meters special braided hose for airbrushing.
- Accessory wrench.

SAGOLA
HOLDER SP2
elcometer
12.8
SAGOLA
VIDA DE SERVICIO
FILTRO PURIFICADOR
DE AIRE
AIR PURIFYING FILTER
VIDA DE SERVICIO
FILTRO PURIFICADOR
COALESCENTE
COALESCENT AIR FILTER
VIDA DE SERVICIO
FILTRO PURIFICADOR
CARBON ACTIVO
ACTIVE CHARCOAL AIR FILTER

05

Air filtering system

The air from a compressor which is circulating throughout the line contains particles and solid impurities, water from the relative humidity of the suctioned air and burnt oil from the compressor.

That's why it is necessary to eliminate these impurities with the help of a filter but taking into account that we always have to obtain the maximum performance with the minimum pressure loss.

SAGOLA filtering systems guarantee maximum air quality.

Temperature

- General recommendation: Between 15ºC and 25ºC
- At least 5ºC above the dew point of the booth.
- At least 5ºC above the dew point of compressed air.

Dew point

DP < 3ºC	Optimum air quality
3ºC < DP > 7ºC	Good air quality
DP > 7ºC	Poor air quality

Thermohygrometer

content in the
Sagola Air Quality Test.
Measure:
Compressed air temperature.
Compressed air dew point.
Relative humidity of compressed air.

Pack 6000X

Compressed air
temperature regulation

Temperature

Part temperature at least 5ºC
above booth dew point.

Elcometer 319

Measurement of environmental
conditions in the booth and
on the surface

AIR, TEMPERATURE AND HUMIDITY

THE PERFECT BALANCE BETWEEN ALL THE BOOTH ELEMENTS

Sagola's air treatment tools and diagnostic equipment for environmental conditions provide the necessary information to achieve the perfect balance between all the elements of the booth.

Booth filter

Elimination of condensates and vapors of water and oil.
Solid particle retention.

Solids trap

Content in the Sagola Air Quality Test.

Diagnosis of the presence of solid particles, air or oil condensates in the compressed air network.

Air filtering systems

It is necessary to remove the impurities from the compressed air by means of a filter, bearing in mind that the maximum performance must be obtained for the painting job.

SAGOLA FILTERING SYSTEMS guarantee maximum air quality and minimum pressure loss of line.

The air from a compressor which is circulating throughout the line contains particles and solid impurities, water from the relative humidity of the suctioned air and burnt oil from the compressor.

That's why it is necessary to eliminate these impurities with the help of a filter but taking into account that we always have to obtain the maximum performance with the minimum pressure loss.

SAGOLA filtering systems guarantee maximum air quality.

With the recent emergence of the new regulations concerning the drastic decrease of solvents in the new primers, basecoats, HS clearcoats and even in the waterborne paints, the existence of impurities in the compressed air which is used to spray is now more critical for the final results of the bodywork, mainly due to:

- In HS: the high gloss of these paints, their poor proportion of solvents and their decrease in the number of finishing coats make that the small particles proceeding from the compressed air become striking.

- In waterborne paints: their high incompatibility with any oil and organic fumes makes the air quality requirements very high.

Keys for the correct selection of the filter

The type and condition of the installed compressor and the quality of the air it is supplying must be taken into account for the election of a filtration system to install.

For example, If greater air purity is required a model **5200X Coalescent Purifier Regulator** should be installed -with which the following will be eliminated water and solid particles larger than 0.01 microns, water aerosols (C>0.01 mg/m^3) and oil aerosols (C>0.01 mg/m^3)- or a **Purifier regulator with Coalescent Filter plus Active Charcoal model 5300X** -used when it is necessary to eliminate oil, hydrocarbons or water in vapour form , organic fumes are present, foul air, solid particles larger than 0.01 microns and residual oil: maximum 0.003 p.p.m.-.

5000X range filters

Air filters designed and developed for the new technologies of automobile painting. Ideal for waterborne and HS paints.

Maximum air quality

The quality of compressed air is becoming more important every day in production processes. Contaminated air causes damage and manufacturing costs in many cases.

Not only is it important to have good quality compressed air where it may come into contact with the product, it is therefore essential to carry out a quality analysis of the compressed air.

Obtaining a good quality of compressed air is essential for a correct operation of the machines and to achieve an optimal final finish in the production processes.

Minimum pressure loss within the line

For these reasons it is necessary to eliminate impurities by means of a filter, taking into account that the maximum performance with the minimum pressure loss must be obtained.

Ventajas principales

- Air-assisted regulator.
- Rapid discharge; instant pressure reduction.
- Aluminium body. CNC machined for toughness.
- Unmanned discharge of liquids and impurities.
- Maximum flow 2,870 L/min., outlets for 2 guns.
- 8µ filter + Deflector of high capacity of solid and liquids retention.
- 1/2" inch air inlet.
- Filter life control. We incorporate dynamic element of life control.

Complete 5000X Series Filtration System

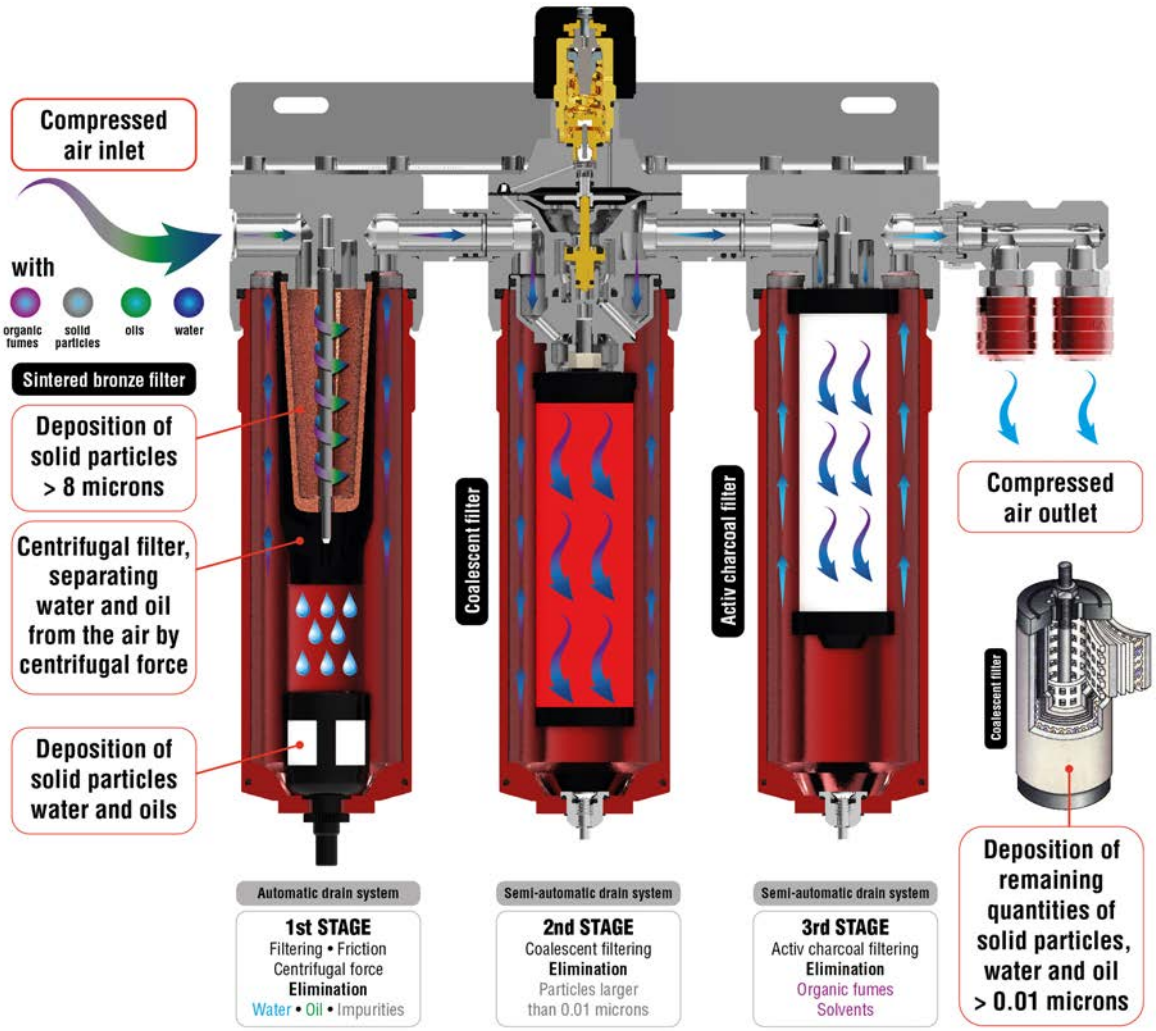

5300X purifying filter

5300X purifying filter

Sagola 5300X filter offers the maximum filtration level in spray booths and painting lines where finishing is highly demanding.

Three filtered stages. Sinterised brass 8 microns pre filtration is incorporated, followed by a 0.01 micron Coalescent filter and final filtration by a wide surface active charcoal filter.

Ideal for waterborne painting lines (and organic vapor problems in the network).

This model eliminates, in addition to water and impurities, organic fumes and foul air.

REGULATIONS:
2006/42/CE
ATEX Ex 2 II GX
UNE EN-13463-1

TECHNICAL DATA — 5300X FILTER

Weight	6.62 Kilograms		14.59 lbs
Dimensions	38.3 X 12.3 X 37.2 cm.		15.08 x 4.84 x 14.66 “
Air flow at 7 bar (101 psi)	2,870 L/min.		101 cfm
Air outlet connection	BSP 1/4” Female	Air intlet connection	BSP 1/2” Female
Filtering type (3 stages)	**1°** 8 µ Sinterised brass / **2°** 0.01 µ Coalescent filter / **3°** Active charcoal filter		
Maximun working pressure	12 bar		174 psi
Maximum working temperature	90°C		194°F
Drain system	1 Automatic drain + 2 Semi-automatic drain		

VERSIONS

Description	Code
5300X air regulator filter with BSP 1/4” US-Mil coupling	**10730305**
5300X air regulator filter with BSP 1/4” Euro-Profile coupling	**10730308**
5300X air regulator filter with BSP 1/4” Nitto (exclusive in Asia) coupling	**10730351**

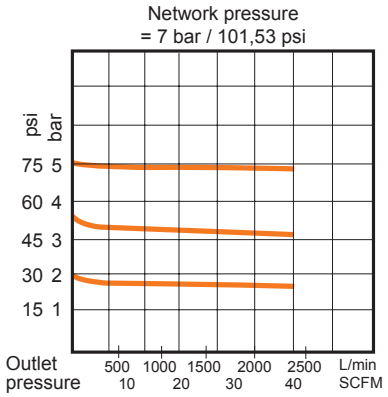

Versatile modular system

If you need to upgrade your system from a standard filter to a coalescing system or upgrade to activated carbon, with the Sagola 5000X modular system you can easily upgrade with a conversion kit.

Made to last with minimal maintenance

Manufactured from machined aluminum with stainless steel couplings, the Sagola 5000X range of filters are incredibly durable.

Options

From pre-filters for moisture separation to coalescing filters to remove particles down to 0.01 microns or active carbon filters for breathing air.

The Sagola 5000X range is available in a number of models to meet the demands of any bodywork.

5300X Plus purifying filter

5300X Plus purifying filter

Filter with the same technical and mechanical features as the 5300X model. Prepared for independent use of activated carbon filtering.

Double coalescing filter outlet for painting or blowing. Simple Active Carbon filter outlet for breathing or painted equipment.

Three filtered stages. Sinterised brass 8 microns pre filtration is incorporated, followed by a 0.01 micron Coalescent filter and final filtration by a wide surface active charcoal filter.

REGULATIONS:
2006/42/CE
ATEX Ex 2 II GX
UNE EN-13463-1

TECHNICAL DATA

	5300X PLUS FILTER		
Weight	6.8 Kilograms	14.99 lbs	
Dimensions	37.7 X 11.9 X 37.2 cm.	14.84 x 4.69 x 14.66 “	
Air flow at 7 bar (101 psi)	2,870 L/min.	101 cfm	
Air outlet connection	BSP 1/4” Female	Air intlet connection	BSP 1/2” Female
Filtering type (3 stages)	**1º** 8 µ Sinterised brass / **2º** 0.01 µ Coalescent filter / **3º** Active charcoal filter		
Maximun working pressure	12 bar	174 psi	
Maximum working temperature	90°C	194°F	
Drain system	1 Automatic drain + 2 Semi-automatic drain		

VERSIONS

Description	Code
5300X Plus air regulator filter with BSP 1/4” US-Mil coupling	**10730306**
5300X Plus air regulator filter with BSP 1/4” Euro-Profile coupling	**10730309**
5300X Plus air regulator filter with BSP 1/4” Nitto (exclusive in Asia) coupling	**10730310**

Filter life controller

Offer a helpful visual reminder of maintenance programs of our filters. The timer is included in each filter kit.

Timer of **3 months**: Active charcoal filter

Timer of **6 months**: Sinterised brass and Coalescent filter.

The filters have a limited useful life in your filtration equipment. When filters becoame clogged, equipment performance can decrease. Therefore, we have no guarantee of 100% correct filtering.

When you start using the filter you must press the “ON” button on the device.

5200X purifying filter

5200X purifying filter

The 5200X model offers the highest technology for air filtering. Two stages of filtering.

Incorporates an 8 micron sinterised brass filter followed by a final 0.01 micron coalescent filter.

Automatic drain system and assisted regulator wheel.

Highly resistant and protective vessels. its draining system reduces maintenance costs due to its greater durability.

It carries out double filtration with optimum flow and pressure regulation, retention of water and impurities achieving an air purity of 99%.

REGULATIONS:
2006/42/CE
ATEX Ex 2 II GX
UNE EN-13463-1

TECHNICAL DATA

			5200X FILTER
Weight	4.7 Kilograms		10.36 lbs
Dimensions	27.1 X 12.3 X 37.2 cm.		10.67 x 4.84 x 14.66 “
Air flow at 7 bar (101 psi)	> 3,000 L/min.		> 106 cfm
Air outlet connection	BSP 1/4” Female	Air inlet connection	BSP 1/2” Female
Filtering type (2 stages)	**1°** 8 µ Sinterised brass / **2°** 0.01 µ Coalescent filter		
Maximun working pressure	12 bar		174 psi
Maximum working temperature	90°C		194°F
Drain system	1 Automatic drain + 1 Semi-automatic drain		

VERSIONS

Description	Code
5200X air regulator filter with BSP 1/4” US-Mil coupling	**10730304**
5200X air regulator filter with BSP 1/4” Euro-Profile coupling	**10730307**
5200X air regulator filter with BSP 1/4” Nitto (exclusive in Asia) coupling	**10730350**

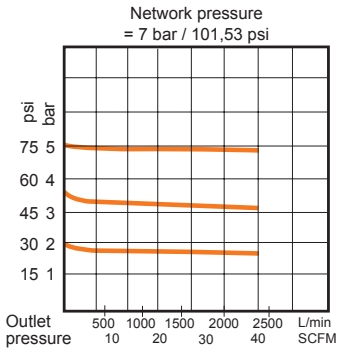

How to change a filter

1. Unscrew lower section

2. Extract filter

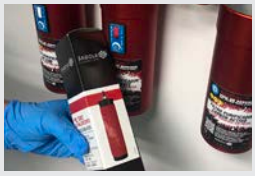

3. Replace spare filter

4. Grease and place lower section

5. Place the timer

5100X / 5050X / 5000X purifying filter

5100X purifying filter

Air purifying filter with pressure regulator and pressure gauge.

Its vessel is tougher and more protective.

5100X filter comes with a new draining system which reduces maintenance costs due to its greater durability.

The filtering system retains water and impurities. Incorporates 8 micron sinterised filter.

5050X purifying filter

The 5050X model is an Purifier Filter with automatic drain system. Ideal for pre-filtering in industrial air lines. Incorporates 8 micron sinterised filter.

Line pre-filter for: medium compressor output (1/2" air inlet), mains level changes, booth input,...

5000X purifying filter

Purifier Filter with regulator, with a perfect price/quality ratio. Ideal for solvent basecoat paint booths and preparation areas.

The 5000X model features a semi-automatic drain system and dual air outlets.

Filtering system that retains water, oil and other impurities. Incorporates a 20 micron filter.

REGULATIONS:
2006/42/CE
ATEX Ex 2 II GX
UNE EN-13463-1

TECHNICAL DATA	5100X		5050X		5000X	
Weight	2.64 Kg.	5.82 lbs	1.95 Kg.	4.30 lbs	2.3 Kg.	5.07 lbs
Dimensions (cm.)	15.9 x 12.3 x 37.3 cm.		11.4 x 11.9 x 33.9 cm.		14.8 x 11.9 x 38.4 cm.	
Dimensions (inchs)	6.26 x 4.84 x 14.65"		4.49 x 4.69 x 13.35"		5.93 x 4.69 x 15.12"	
Air flow at 7 bar (101 psi)	> 3,000 L/min.	> 106 cfm	> 3,000 L/min.	> 106 cfm	> 3,000 L/min.	> 106 cfm
Air outlet connection	BSP 1/4" F		BSP 1/4" F		BSP 1/4" F	
Air inlet connection	BSP 1/2" F		BSP 1/2" F		BSP 1/2" F	
Filtering type	8 µ Sinterised brass		8 µ Sinterised brass		20 µ Sinterised brass	
Maximun working pressure	12 bar	174 psi	12 bar	174 psi	12 bar	174 psi
Maximum working temperature	90°C	194°F	90°C	194°F	90°C	194°F
Drain system	Automatic drain		Automatic drain		Semi-automatic drain	

VERSIONS	5100X	5050X	5000X
Description	**Code**	**Code**	**Code**
Air regulator filter BSP 1/4" US-Mil coupling	**10730202**	**10720301**	**10730204**
Air regulator filter BSP 1/4" Euro-Perfil coupling	**10730206**	**10720302**	**10730205**
Air regulator filter BSP 1/4" Nitto (exclusive in Asia) coupling	**10730208**	**10720303**	**10730207**

Network pressure
= 7 bar / 101,53 psi

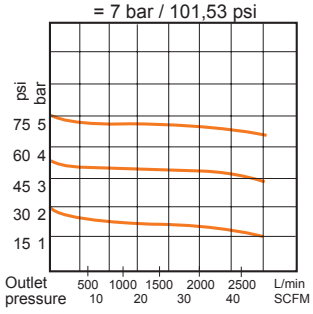

Accessories

The filters have a limited useful life in your filtration equipment. When filters become clogged, equipment performance can decrease. Therefore, we have no guarantee of 100% correct filtering.

5000X filters Kit

Replacement filter kit for 5000X filters.
Includes timer.

Code	Description
56418719	Sintered bronze filter kit
56418071	Coalescent filter Kit
56418070	Active Carbon filter kit

(Includes timer)

5000X filters Kit

20 µ porous bronze filter.
Replacement for 5000X filter.

Code
56418720

Gaskets Kit

Code	Models
56418537	5300X / 5300X+

5000X Manometer

High quality and precision 5000X manometer.

Code
54550016

Double outlet Kit

Couplings US- Mil.

Code
56418704

Filter life controller

Offer a helpful visual reminder of maintenance programs of our filters.

The timer is included in each filter kit.

- Timer of 3 months (Active charcoal filter)
- Timer of 6 months (Sinterised brass and Coalescent filter)

Automatic drain Kit

Code	Models
56450010	5050X / 5100X / 5200X / 5300X / 5300X+

Semi-automatic drain Kit

Code	Models
56418533	5000X

Displays 5000X filters range

Code	Description
70000005	Display filter support 5100X
70000006	Display filter support 5300X / 5200X

Accessories

If you need to upgrade your system from a standard filter to a coalescing system or upgrade to activated carbon, with the Sagola 5000X modular system you can easily upgrade with a conversion pack.

Coalescent filter coupling

Coupling to convert a 5100X to a 5200X filter.

The definitive solution to problems with solid particles. It incorporates a wide surface coalescent filter. Increase of efficiency up to 0.01 microns. Semi-automatic drain system (+ the automatic drain system of 5100X).

Code
56418521

Active charcoal filter coupling

Coupling to convert a 5200X to a 5300X filter.

The best solution to problems of contaminating particles and organic fumes in the air network. It incorporates a wide surface active charcoal cartridge. Semi-automatic drain system (+ 2 drains coming with 5200X).

Code
56418520

Air quality test equipment

Equipment for the detection of air impurities, humidity level and temperature. It incorporates air quality test equipment with inlet regulator, flashlight with magnifying glass of 30 magnification for visualization of impurities, humidity meter and digital temperature.

It incorporates membrane filter kit, pore 0.45µ (50 units).

Code	Description
15020001	Air quality test Sagola case
49000740	Membrane filter kit. Pore 0.45 µ 50 units.

5000X Series Purifying Filters

Sagola 5300X purifying filter spare parts

SAGOLA is synonymous with quality and service. For this reason, SAGOLA provides a comprehensive spare parts and service guarantee, ensuring the proper maintenance of all its products, even those sold more than 10 years ago.
To ensure the best possible results and a high-quality finish, the spray gun must be thoroughly cleaned after each use and periodically checked for damaged or worn components. Any damaged or worn parts must be replaced.

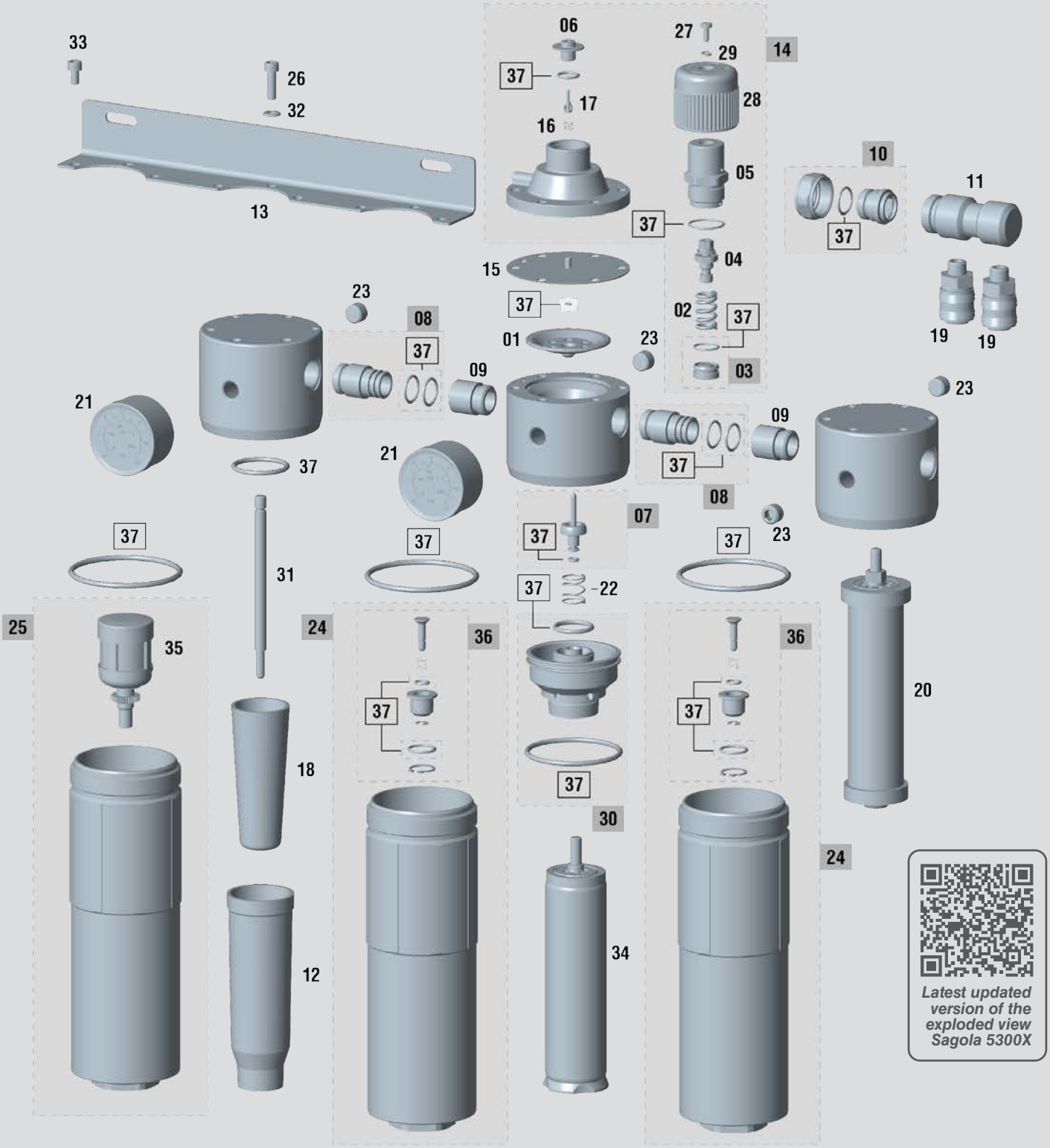

Latest updated version of the exploded view Sagola 5300X

5000X Series Purifying Filters

Sagola 5300X purifying filter spare parts

SPARE PARTS — Sagola 5300X

No.	Code	Description
01	52910002	Guide disc
02	54710249	Cylindrical spring 15 x 25 x 2.6 mm.
03	56410034	Piston
04	56417903	Regulator wheel
05	52713019	Control valve body-lid
06	52910402	Valve disc
07	56417405	Air valve
08	56414914	Connection 1/2” x14 F with joints
09	55710234	Connection 1/2” x14 M - special
10	56410048	Complete connection
11	55710509	Top connection 3/4” x14 M - 3/4” x14 M
12	52713106	Air deflector cup body
13	53310207	Bracket
14	56410047	Complete lid
15	56418562	Membrane + joint Kit
16	54710206	Cylindrical spring 6 x 8 x 0.5 mm.
17	56417409	Air valve
18	56418719	Sinterized brass filter 8 µ
19	11010531	Aluminium coupling BSPT 1/4” M -US-Mil

SPARE PARTS — Sagola 5300X

No.	Code	Description
20	56418070	Active Charcoal filter
21	54550016	Gauge 12 1/4”
22	54710250	Cylindrical spring 16.5 x 24 x 1.5 mm.
23	55752117	Top coupling 1/4” M DIN 906 S.steel
24	56417704	Vessel + Semi-automatic drain
25	56417705	Vessel + Automatic drain
26	57250817	Screw DIN 912 M 6 x 20 S.steel
27	57251305	Screw DIN 7985 M 4 x 10 zinc plated
28	57810329	Air pressure regulator wheel
29	80860703	Washer DIN 7980 4.1 blued
30	56310611	Bracket
31	57211914	Subjection pin
32	50850402	Washer DIN 125-B 6,4 zinc plated
33	57250816	Screw DIN 912 M 6 x10 S.steel
34	56418071	Coalescent filter
35	56450010	Automatic drain
36	56418533	Semi-automatic drain
37	56418537	Gasket Kit

This exploded view is not the material list of the Filter

5000X range filters Kit

Replacement filter kit for the 5300X filter.
Includes timer. (see page 140)

Sintered bronze filter kit

Coalescing filter kit

Active Carbon filter kit

Clean the filter correctly. Follow the cleaning steps in the instruction manual for proper operation of the equipment.

5000X Series Purifying Filters

Sagola 5300X PLUS purifying filter spare parts

SAGOLA is synonymous with quality and service. For this reason, SAGOLA provides a comprehensive spare parts and service guarantee, ensuring the proper maintenance of all its products, even those sold more than 10 years ago.
To ensure the best possible results and a high-quality finish, the spray gun must be thoroughly cleaned after each use and periodically checked for damaged or worn components. Any damaged or worn parts must be replaced.

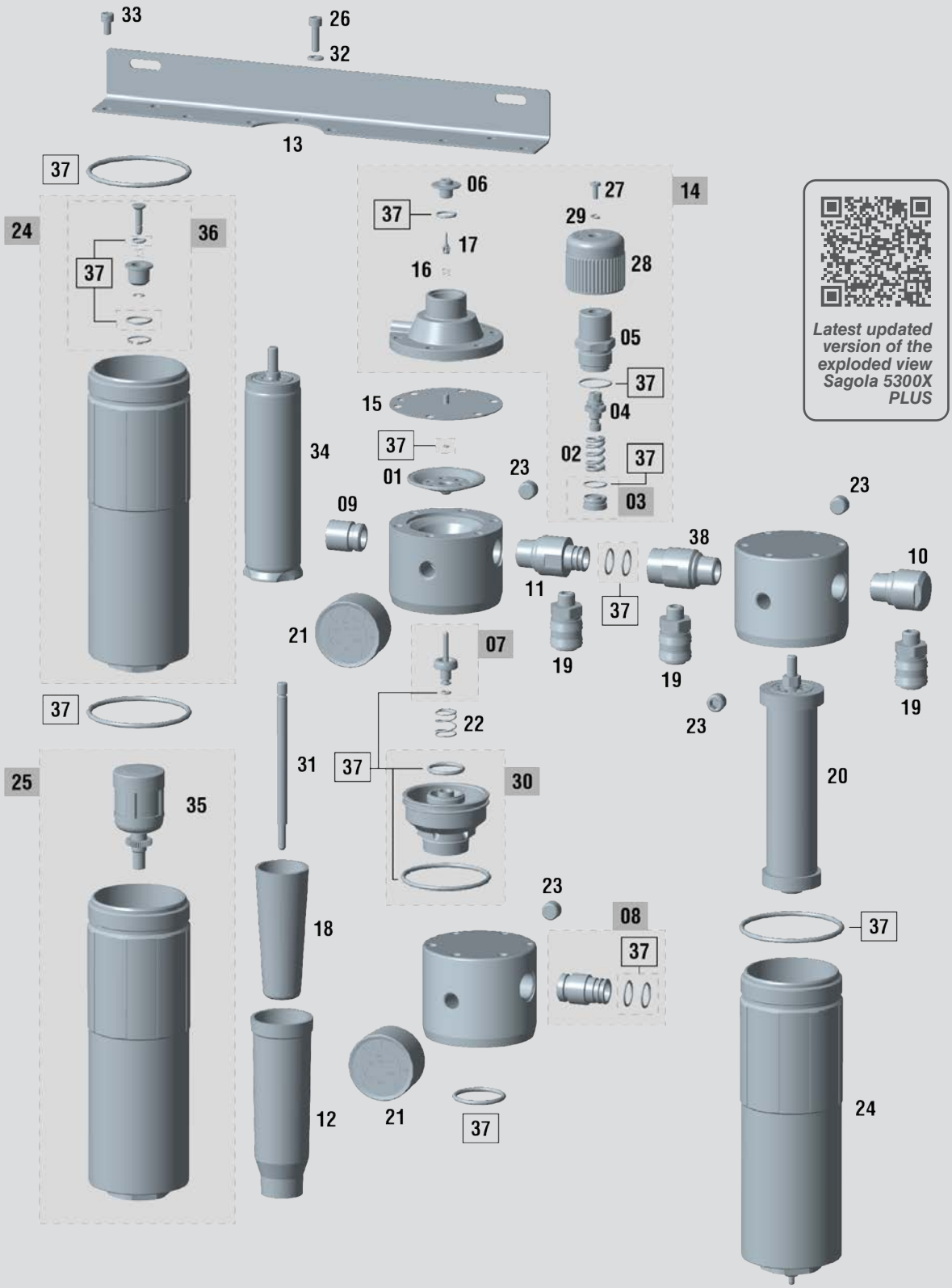

Latest updated version of the exploded view Sagola 5300X PLUS

5000X Series Purifying Filters

Sagola 5300X PLUS purifying filter spare parts

SPARE PARTS — **Sagola 5300X PLUS**

No.	Code	Description
01	52910002	Guide disc
02	54710249	Cylindrical spring 15 x 25 x 2.6 mm.
03	56410034	Piston
04	56417903	Regulator wheel
05	52713019	Control valve body-lid
06	52910402	Valve disc
07	56417405	Air valve
08	56414914	Connection 1/2” x14 F with joints
09	55710234	Connection 1/2” x14 M - special
10	55712165	Top connection 1/2” x 14 M BSPT
11	55710243	Connection 1/2” x14 M - Special (Male)
12	52713106	Air deflector cup body
13	53310215	Bracket
14	56410047	Complete lid
15	56418562	Membrane + joint Kit
16	54710206	Cylindrical spring 6 x 8 x 0.5 mm.
17	56417409	Air valve
18	56418719	Sinterized brass filter 8 µ
19	11010531	Aluminium coupling BSPT 1/4” M -US-Mil

SPARE PARTS — **Sagola 5300X PLUS**

No.	Code	Description
20	56418070	Active Charcoal filter
21	54550016	Gauge 12 1/4”
22	54710250	Cylindrical spring 16.5 x 24 x 1.5 mm.
23	55752117	Top coupling 1/4” M DIN 906 S.steel
24	56417704	Vessel + Semi-automatic drain
25	56417705	Vessel + Automatic drain
26	57250817	Screw DIN 912 M 6 x 20 S.steel
27	57251305	Screw DIN 7985 M 4 x 10 zinc plated
28	57810329	Air pressure regulator wheel
29	80860703	Washer DIN 7980 4.1 blued
30	56310611	Bracket
31	57211914	Subjection pin
32	50850402	Washer DIN 125-B 6.4 zinc plated
33	57250816	Screw DIN 912 M 6 x10 S.steel
34	56418071	Coalescent filter
35	56450010	Automatic drain
36	56418533	Semi-automatic drain
37	56418537	Gasket Kit
38	55710244	Connection 1/2” x14 M - Special (Female)

This exploded view is not the material list of the Filter

5000X range filters Kit

Replacement filter kit for the 5300X PLUS filter.
Includes timer. (see page 140)

Sintered bronze filter kit

Coalescing filter kit

Active Carbon filter kit

Clean the filter correctly. Follow the cleaning steps in the instruction manual for proper operation of the equipment.

5000X Series Purifying Filters

Sagola 5200X purifying filter spare parts

SAGOLA is synonymous with quality and service. For this reason, SAGOLA provides a comprehensive spare parts and service guarantee, ensuring the proper maintenance of all its products, even those sold more than 10 years ago.
To ensure the best possible results and a high-quality finish, the spray gun must be thoroughly cleaned after each use and periodically checked for damaged or worn components. Any damaged or worn parts must be replaced.

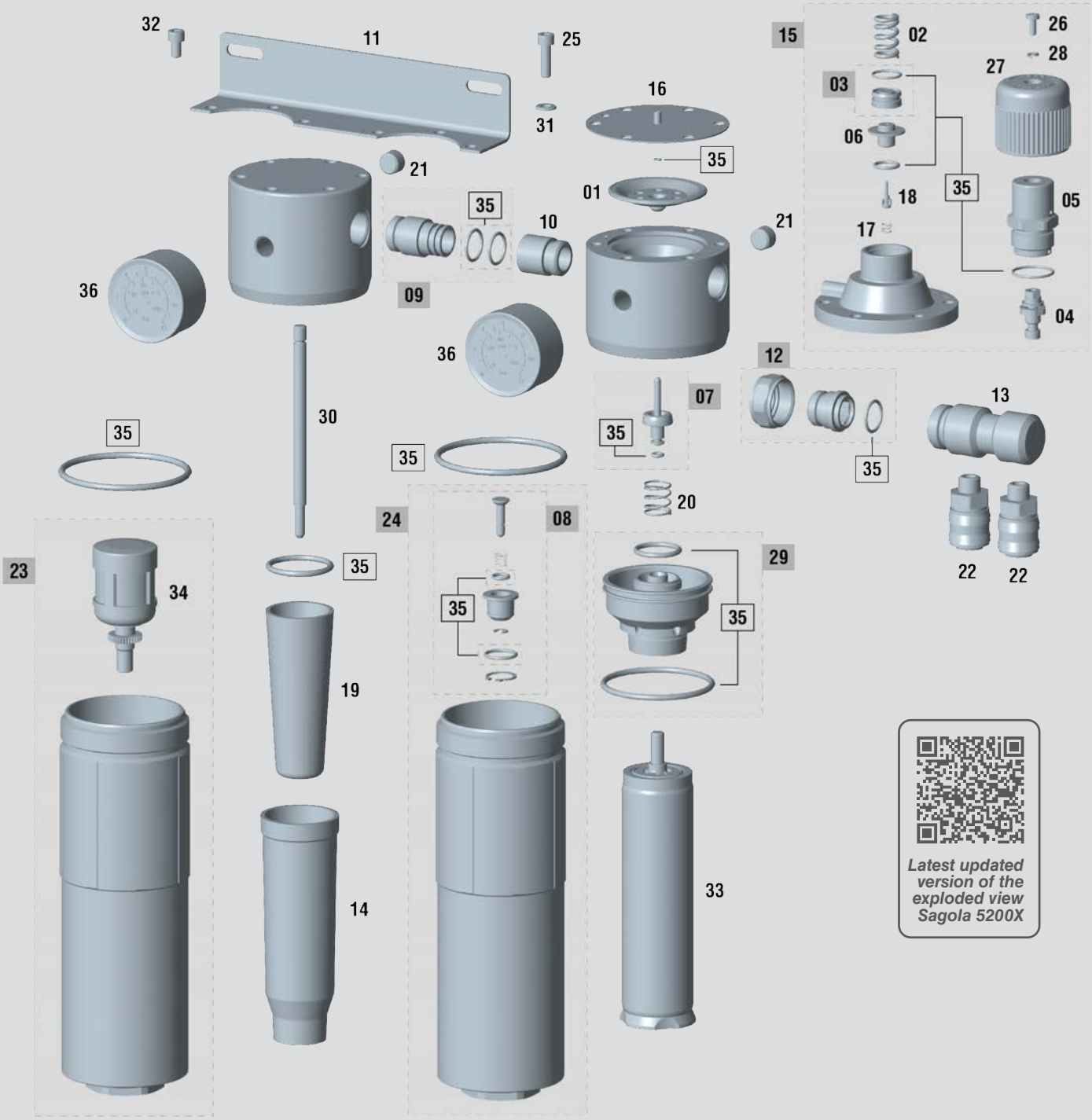

Latest updated version of the exploded view Sagola 5200X

5000X Series Purifying Filters

Sagola 5200X purifying filter spare parts

SPARE PARTS — **Sagola 5200X**

No.	Code	Description
01	52910002	Guide disc
02	54710249	Cylindrical spring 15 x 25 x 2.6 mm.
03	56410034	Piston
04	56417903	Regulator wheel
05	52713019	Control valve body-lid
06	52910402	Valve disc
07	56417405	Air valve
08	56418533	Semi-automatic drain
09	56414914	Connection 1/2" x14 F with joints
10	55710234	Connection 1/2" x14 M - special
11	53310206	Bracket
12	56410048	Coupling Kit
13	55710509	Top connection 3/4" x 14 M - 3/4" x 14 M
14	52713106	Air deflector cup body
15	56410047	Complete lid
16	56418562	Membrane + joint Kit
17	54710206	Cylindrical spring 6 x 8 x 0.5 mm.
18	56417409	Air valve

SPARE PARTS — **Sagola 5200X**

No.	Code	Description
19	56418719	Sinterized brass filter 8 µ
20	54710250	Cylindrical spring 16.5 x 24 x 1.5 mm.
21	55752117	Top coupling 1/4" M DIN 906 S.steel
22	11010531	Aluminium coupling BSPT 1/4" M -US-Mil
23	56417705	Vessel + Automatic drain
24	56417704	Vessel + Semi-automatic drain
25	57250817	Screw DIN 912 M 6 x 20 S.steel
26	57251305	Screw DIN 7985 M 4 x 10 zinc plated
27	57810339	Air pressure regulator wheel
28	80860703	Washer DIN 7980 4.1 blued
29	56310611	Bracket
30	57211914	Subjection pin
31	50850402	Washer DIN 125-B 6.4 zinc plated
32	57250816	Screw DIN 912 M 6 x10 S.steel
33	56418071	Coalescent filter
34	56450010	Automatic drain
35	56418536	Gasket Kit
36	54550016	Gauge 12 1/4"

This exploded view is not the material list of the Filter

5000X range filters Kit

Replacement filter kit for the 5200X filter.
Includes timer. (see page 140)

Sintered bronze filter kit

Coalescing filter kit

Clean the filter correctly. Follow the cleaning steps in the instruction manual for proper operation of the equipment.

5000X Series Purifying Filters

Sagola 5100X purifying filter spare parts

SAGOLA is synonymous with quality and service. For this reason, SAGOLA provides a comprehensive spare parts and service guarantee, ensuring the proper maintenance of all its products, even those sold more than 10 years ago.
To ensure the best possible results and a high-quality finish, the spray gun must be thoroughly cleaned after each use and periodically checked for damaged or worn components. Any damaged or worn parts must be replaced.

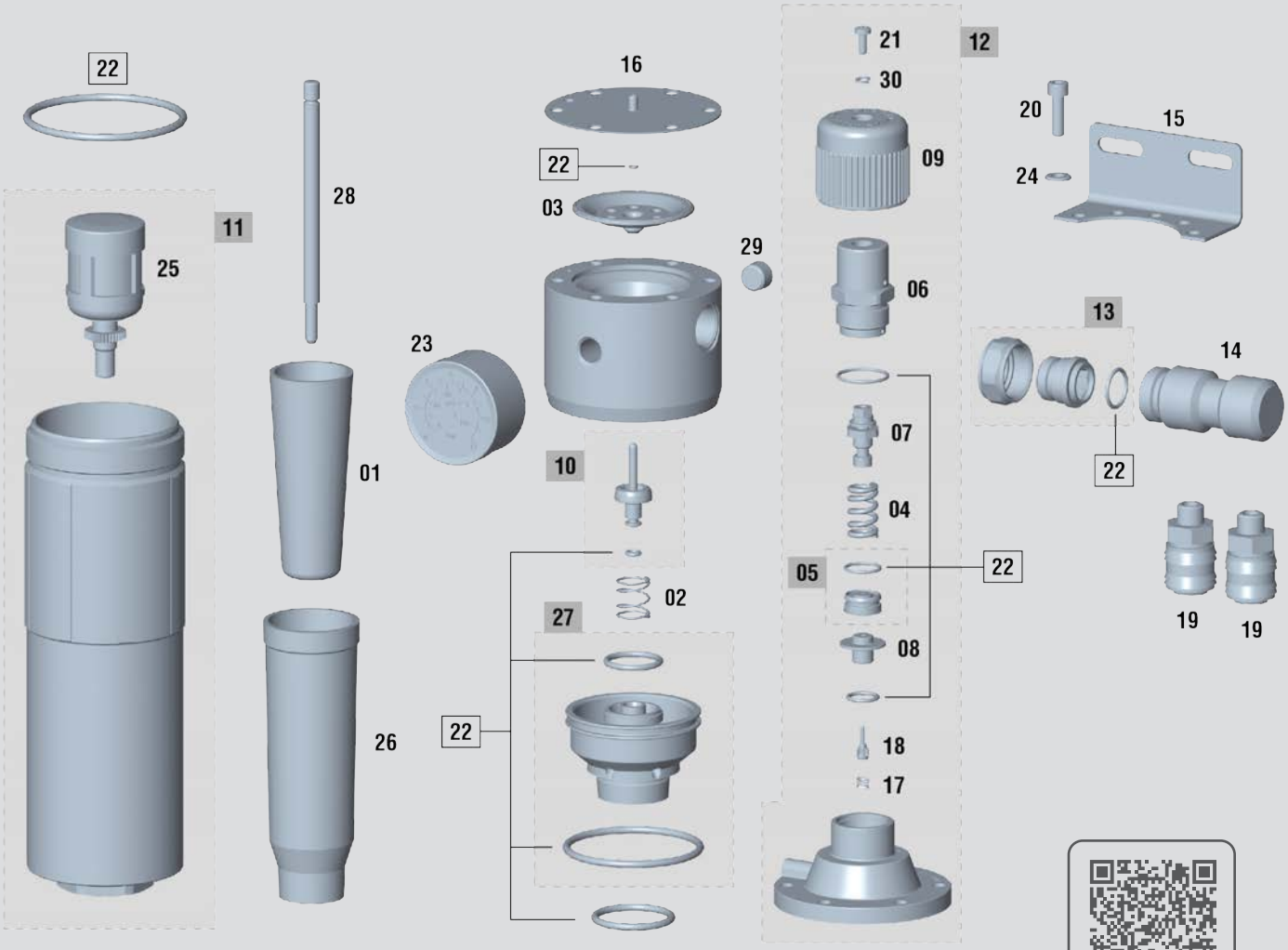

Latest updated version of the exploded view Sagola 5100X

5000X Series Purifying Filters

Sagola 5100X purifying filter spare parts

SPARE PARTS — Sagola 5100X

No.	Code	Description
01	56418719	Sinterized brass filter 8 µ
02	54710250	Cylindrical spring 16.5 x 24 x 1.5 mm.
03	52910002	Guide disc
04	54710249	Cylindrical spring 15 x 25 x 2.6 mm.
05	56410034	Piston
06	52713019	Control valve body-lid
07	56417903	Regulator wheel
08	52910402	Valve disc
09	57810339	Regulator wheel
10	56417405	Air valve
11	56417705	Vessel + Automatic drain
12	56410047	Complete lid
13	56410048	Coupling Kit
14	55710509	Top connection 3/4” x 14 M - 3/4” x 14 M
15	53310205	Bracket

SPARE PARTS — Sagola 5100X

No.	Code	Description
16	56418562	Membrane + joint Kit
17	54710206	Cylindrical spring 6 x 8 x 0.5 mm.
18	56417409	Air valve
19	11010531	Aluminium coupling BSPT 1/4” M -US-Mil
20	57250817	Screw DIN 912 M 6 x 20 S.steel
21	57251305	Screw DIN 7985 M 4 x 10 zinc plated
22	56418535	Gasket Kit
23	54550016	Gauge 12 1/4”
24	50850402	Washer DIN 125-B 6.4 zinc plated
25	56450010	Automatic drain
26	52713106	Air deflector cup body
27	56310611	Bracket
28	57211914	Subjection pin
29	55752117	Top connection 1/4” M DIN 906 S.steel
30	80860703	Washer DIN 7980 4.1 blued

This exploded view is not the material list of the Filter

5000X range filters Kit

Replacement filter kit for the 5100X filter.
Includes timer. (see page 140)

Sintered bronze filter kit

Clean the filter correctly. Follow the cleaning steps in the instruction manual for proper operation of the equipment.

5000X Series Purifying Filters

Sagola 5050X purifying filter spare parts

SAGOLA is synonymous with quality and service. For this reason, SAGOLA provides a comprehensive spare parts and service guarantee, ensuring the proper maintenance of all its products, even those sold more than 10 years ago.
To ensure the best possible results and a high-quality finish, the spray gun must be thoroughly cleaned after each use and periodically checked for damaged or worn components. Any damaged or worn parts must be replaced.

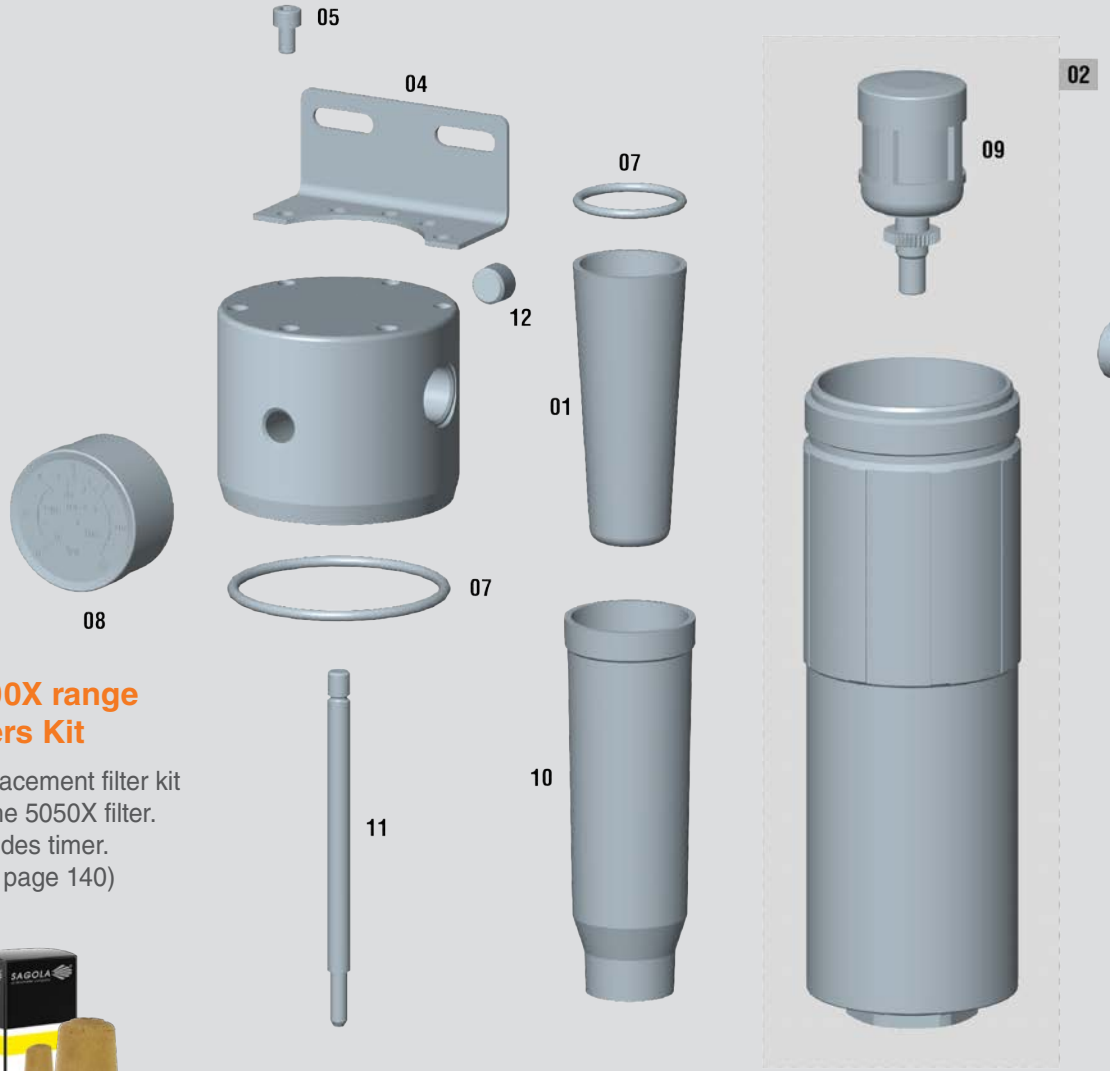

5000X range filters Kit

Replacement filter kit for the 5050X filter. Includes timer.
(see page 140)

Sintered bronze filter kit

Latest updated version of the exploded view Sagola 5050X

This exploded view is not the material list of the Filter

SPARE PARTS — Sagola 5050X

No.	Code	Description
01	56418719	Sinterized brass filter 8 µ
02	56417705	Vessel + Automatic drain
03	55712165	Top connection 1/2” x 14 M BSPT
04	53310205	Bracket
05	57250816	Screw DIN 912 M 6 x10 S.steel
06	11010531	Aluminium coupling BSPT 1/4” M -US-Mil

SPARE PARTS — Sagola 5050X

No.	Code	Description
07	56418534	Gasket Kit
08	54550016	Gauge 12 1/4”
09	56450010	Automatic drain
10	52713106	Air deflector cup body
11	57211914	Subjection pin
12	55752117	Top coupling 1/4” M DIN 906 S.steel

5000X Series Purifying Filters

Sagola 5000X purifying filter spare parts

SAGOLA is synonymous with quality and service. For this reason, SAGOLA provides a comprehensive spare parts and service guarantee, ensuring the proper maintenance of all its products, even those sold more than 10 years ago.
To ensure the best possible results and a high-quality finish, the spray gun must be thoroughly cleaned after each use and periodically checked for damaged or worn components. Any damaged or worn parts must be replaced.

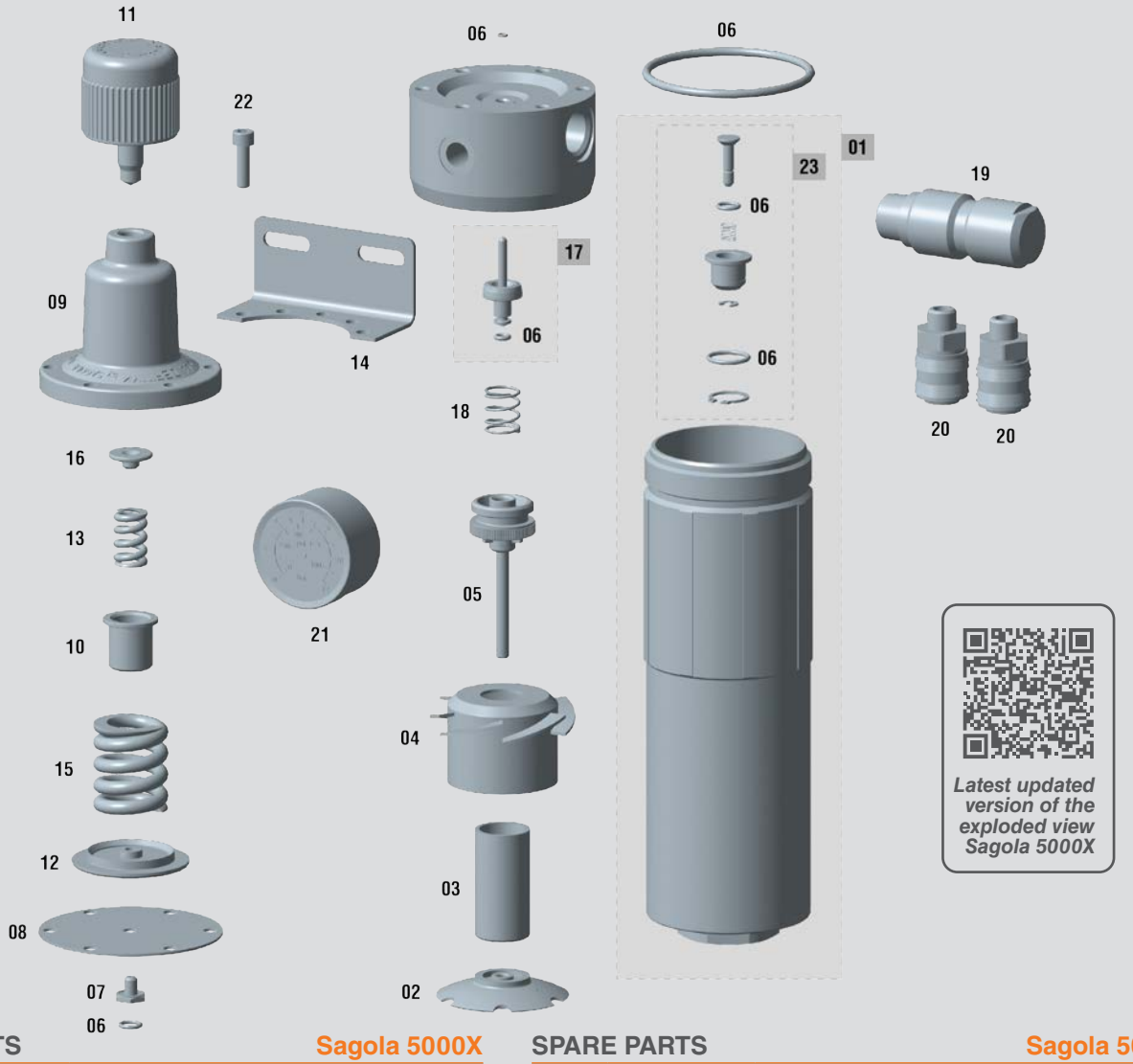

Latest updated version of the exploded view Sagola 5000X

SPARE PARTS — Sagola 5000X

No.	Code	Description
01	56417704	Vessel + Semi-automatic drain
02	57411202	Filter Subjection nut
03	56418720	Porous bronze filter 20 µ
04	52713103	Air deflector cup body
05	56310604	Bracket
06	56418532	Gasket Kit
07	57210101	Membrane fastening screw
08	54610302	Regulator membrane
09	57110202	Regulator bell lid
10	56310011	Spring support pan
11	57810341	Air pressure regulator wheel with shaft
12	50810016	Membrane support washer

SPARE PARTS — Sagola 5000X

No.	Code	Description
13	54710245	Cylindrical spring 15.5 x 24.1 x 3.5 mm.
14	53310202	Bracket
15	54710263	Cylindrical spring 34 x 40 x 6.5 mm.
16	51911518	Top bushing - Push spring
17	56417405	Air valve
18	54710250	Cylindrical spring 16.5 x 24 x 1.5 mm.
19	55712175	Top coupling 1/2” x 14 M BSPT
20	11010531	Aluminium coupling BSPT 1/4” M -US-Mil
21	54550016	Gauge 12 1/4”
22	57250817	Screw DIN 912 M 6 x20 S.steel
23	56418533	Semi-automatic drain

Pack 6000X Air Heater

The **Sagola Pack 6000X Air Heater** system heats compressed air to a constant working temperature to ensure a stable painting process and a reduction in dew point temperature.

Maximum air quality all year round. Regardless of environmental conditions, the Pack 6000X Air Heater supplies compressed air used in painting processes at a constant temperature, even when there are large temperature differences between day and night, winter and summer.

Heating the compressed air reduces its relative humidity avoiding condensation problems in cold and humid climates.

The use of this equipment provides a finish of optimum surface quality. Maintains a constant temperature in the compressed air, as required for the application of certain types of products.

REGULATIONS:
89/392/CE
2006/95 CE, 2006/42 CS
y 2004/108 CE

TECHNICAL DATA

			PACK 6000X
Weight		3.6 Kg.	7.4 lbs
Dimensions		40,5 X 9,2 X 25,5 cm.	15.9 x 3.6 x 10.04“
Maximum air flow at 7 bar		750 L/min.	26.48 cfm
Maximun working pressure		12 bar	174 psi
Maximum electrical consumption		800 w	
Power		240V/50Hz - 110V/60Hz	
Working temperature range	Clearcoats	40-60°C	104-140°F
	Waterborne	30-50°C	86-122°F
	Solvent basecoats	30-40°C	86-104°F

VERSIONS / ACCESSORIES

Description	Code
Sagola Pack 6000X Air Heater 220V - 50Hz	**10780102**
Sagola Pack 6000X Air Heater 110V - 60Hz	**10780104**
11 m. Heated air hose Ø10 x 18 mm. 220V - 50Hz	**56414030**
11 m. Heated air hose Ø10 x 18 mm. 110V - 60Hz	**56414031**

Easy to use

Light, small and easy to install. The Pack 6000X is equipped with a digital PID temperature controller and a push button LED display with red and green indicators to identify when the selected temperature has been reached.

Cool Touch case

Cold air enters the pressurized chamber cooling the outer casing of the equipment, keeping it isolated from the hot chamber inside, ensuring the Pack 6000X is safe to the touch.

Pack 6000X Air Heater

Air heater main parts

01 **CONTROLS**

02 **NETWORK SWITCH**

03 **RED LED PILOT (Heating)**

03 **GREEN LED PILOT (Ready)**

04 **TEMPERATURE SENSOR**

05 **FLOW SWITCH**

06 **COLD AIR CHAMBER** (Unpressurized)

07 **HOT AIR CHAMBER** (Pressurized)

08 **AIR INLET** (from network or filter)

09 **AIR OUTLET** (to hose)

10 **ELECTRIC CONNECTION** (Heated hose)

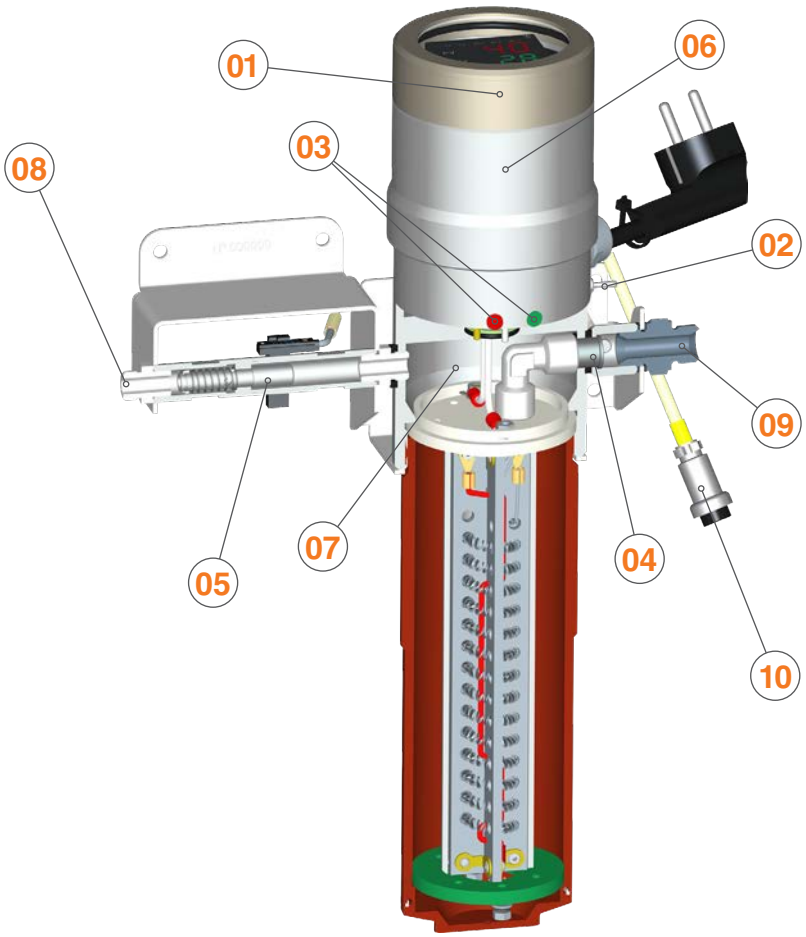

Digital temperature display PID

Termopar Temperature sensor

Self-learning function

Overheating protection

Automatic activation by flow switch

Pack 6000X Air Heater Advantages

- Temperature stability both in the compressed air and the final painting elements such as hose and spray gun.
- Stable painting process in areas with large temperature changes between day and night, winter and summer.
- Constant working temperature.
- Compact and robust.
- Digital temperature display.
- Cold touch, thermal insulation.
- Easy to use; power button and temperature controller.
- Out of the cabin installation.
- Right temperature in the spray gun almost immediately.

Includes an insulated heated hose for maximum energy efficiency.

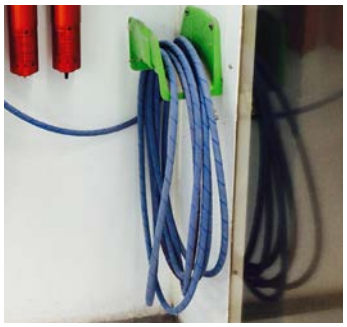

Heated hose system. Independent of ambient temperature.

The Sagola Pack 6000X is supplied with a specially designed heated antistatic hose to prevent heat loss from the air before it reaches the aircap.

Digital temperature display

Quality filtering

Effective solution for filtering compressed air in professional paint booths

The **Sagola 4000 air filtration** system is the effective solution for filtering compressed air in professional paint booths for: car repainting, wood, machinery, plastics and industry in general.

In order to choose the filter system we shall install in our shop, we must take into account the type of air compressor we have, its condition and the quality of the air it is supplying.

In case we are looking for a high quality filtration of particles, water and oil, for painting in a booth and to get a good finish, the filter 4120 would be suitable for primers, lacquers, clearcoats and enamels.

To get the highest performance and finishing quality with waterborne paints and High Solid (HS) products, we may need even more pure air that contains no particles at all.

In that case we have to install a coalescent filter and regulator, that is, the 4220. With this filter system we will eliminate any solid particle down to 0.01 microns, water aerosols (C>0.01 mg/m³) and oil aerosols (C>0.01 mg/m³).

Air filters designed and developed for new car painting technologies. Ideal for waterborne and HS paints.

Accessories for 4000 range filters

Sintered bronze filter 24 µ

Code	Models
56418721	4120/4220

Coalescent filter

Code	Model
56418722	4220

Double outlet kit

Code	Models
56418704	4120/4220

Automatic drain kit

Code	Model
56450010	4220

Semi-automatic drain kit

Code	Models
56418533	4120/4220

Display

Code	Model
70000007	4220

Gasket Kit

Code	Model
56418587	4120
56418588	4220

Vessel + automatic drain kit

Code	Model
56417711	4120
56417712	4220

4000 range Purifying Filters

Maximum air quality

Professional line of air filters and regulators that offers maximum filtration, good performance and resistance, with the best price/quality ratio. The SAGOLA 4000 range removes humidity and oil down to 0.01 microns and ensures minimal air pressure drop (maximum airflow: 1,700 L/min.)

Precision control

Easy to read pressure gauge with double scale, in bar and psi. High-precision regulation system with a large regulation handle. This makes it easy to handle, even with gloved hands.

Reliable and easy to maintain

Made of machined aluminum with an anticorrosive treatment on the entire surface. The 4000 filter range is highly durable and requires minimal maintenance.

Automatic drain system

The combination of automatic drain in the first stage and semi-automatic in the second means that the level of condensate inside the filter is kept at very low levels.

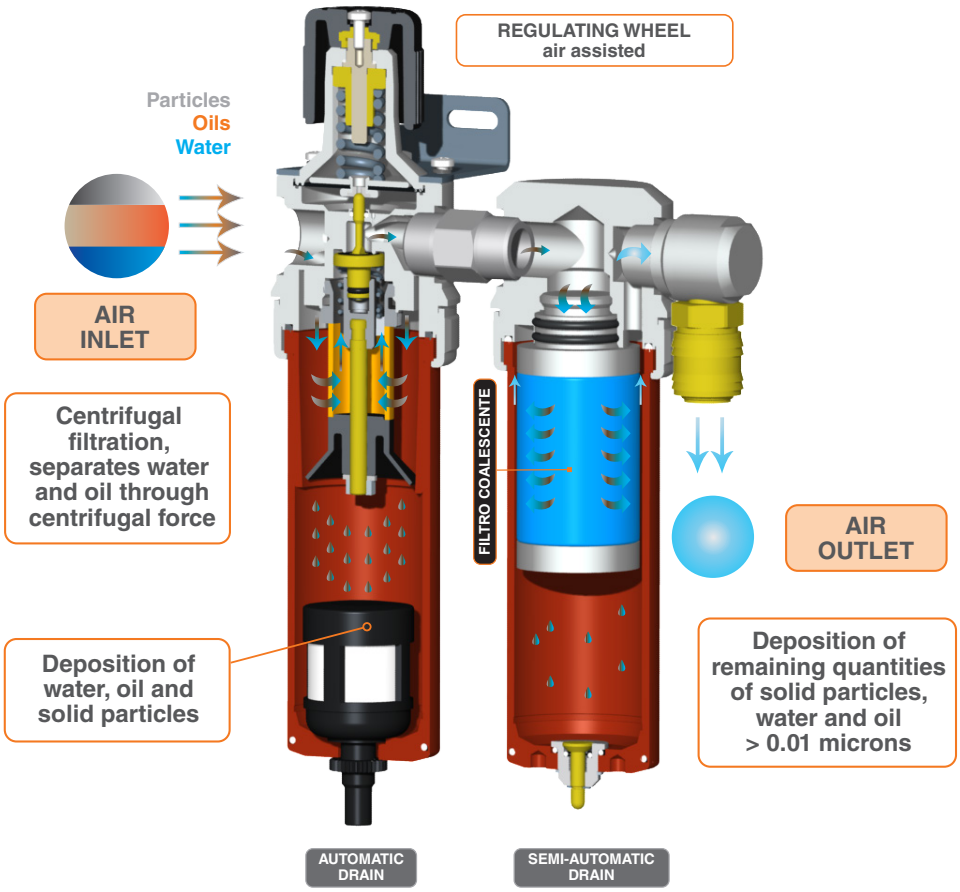

Complete 4000 Series Filtration System

Easy and simple to use. Tool-free disassembly.

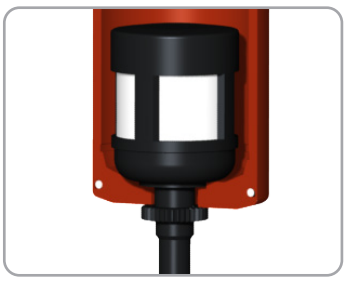

Automatic drain system. Automatic drain of condensed liquids without manipulation.

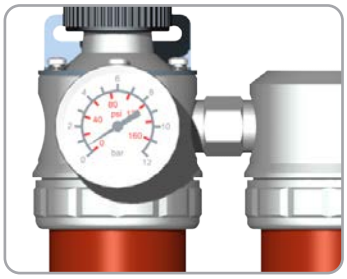

High quality, easy to read manometer. Scale in bar and psi.

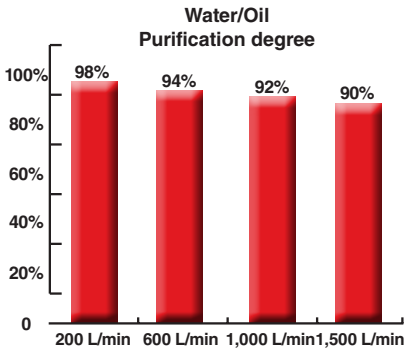

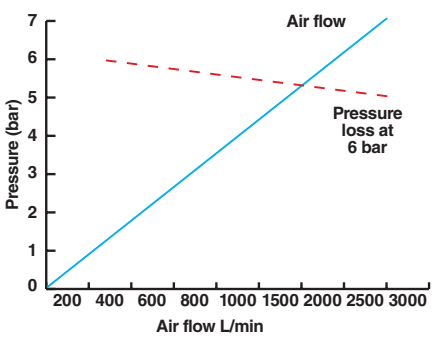

Sagola 4220 Plus purifying filter

Sagola 4220 Plus purifying filter

Two stage air filter. Maximum filtering level. Recommended for last generation finishes. Waterborne paints, HS clearcoats and enamels, high gloss lacquers.

Highly reliable air regulation system. Regulating wheel for a better fit, even with gloves.

Manufactured from a solid aluminum block. Very robust, but light.

1st Stage. Filtration of water, oil and particles + 2nd Stage Submicron Filtering. 0.01 Microns.

Incorporates automatic purge of condensed liquids. High air flow.

Quality pressure gauge and easy to read.

REGULATIONS:
2006/42/CE
ATEX Ex 2 II GX
UNE EN-13463-1

TECHNICAL DATA — 4220 / 4220 PLUS FILTER

Weight (with quick coupling)	2 Kg.	4.4 lbs
Weight (without quick coupling)	1.8 Kg.	3.96 lbs
Dimensions (without quick coupling)	17.8 X 11.7 X 27.9 cm.	7.01 x 4.61 x 10.98“
Air flow	2,415 L/min.	85 cfm
Air outlet connection	BSP 1/4” Female	
Air inlet connection	BSP 1/2” Female	
Filtering type (2 stages)	**1st** 24 µ Bronze filter / **2nd** 0.01 µ Coalescent filter	
Maximun working pressure	10 bar	145 psi
Maximum working temperature	90°C	194°F
Drain system	1 Automatic drain + 1 Semi-automatic drain	

VERSIONS

Description	Code
4220 Air regulator filter	**10750401**
4220 Plus Air regulator filter with BSP 1/4” US-Mil coupling	**10750402**
4220 Plus Air regulator filter with BSP 1/4” Euro-Profile coupling	**10750404**
4220 Plus Air regulator filter with BSP 1/4” Nitto coupling (exclusive in Asia)	**10750403**

Quick couplings and connectors

Made of tempered steel with nitrile butadiene gasket, safe and hermetic closing system. Available in Euro-profile, US-Mil, Multi-profile and Nitto systems. Silicone-free joints. (See page 162)

Antistatic air hoses

Highly flexible and lightweight antistatic hose. Fastening hardware for maximum security. 8mm inner diameter, enough for any spraygun model. (See page 170)

Sagola 4120 Plus purifying filter

Sagola 4120 Plus purifying filter

Effective solution for compressed air filtration in professional paint booths for: car refinish, wood, machinery, plastics and industry in general.

Highly reliable air regulation system. Regulating wheel for a better fit, even with gloves.

Manufactured from a solid aluminum block. Very robust, but light.

Incorporates automatic purge of condensed liquids. High air flow. High quality manometer.

Water, oil and particulate removal by 24 micron sintered bronze filter. Friction and centrifugation filtering.

REGULATIONS:
2006/42/CE
ATEX Ex 2 II GX
UNE EN-13463-1

TECHNICAL DATA

	4120 / 4120 PLUS FILTER	
Weight (with quick coupling)	1.22 Kg.	2.69 lbs
Weight (without quick coupling)	1.015 Kg.	2.24 lbs
Dimensions (without quick coupling)	9.7 X 11.7 X 27.9 cm.	3.82 x 4.61 x 10.98“
Air flow	2,910 L/min.	103 cfm
Air outlet connection	BSP 1/4” Female	
Air inlet connection	BSP 1/2” Female	
Filtering type	**1st** 24 µ Bronze filter	
Maximun working pressure	10 bar	145 psi
Maximum working temperature	90°C	194°F
Drain system	Automatic drain	

VERSIONS

Description	Code
4120 Air regulator filter	**10730501**
4120 Plus Air regulator filter with BSP 1/4” US-Mil coupling	**10730502**
4120 Plus Air regulator filter with BSP 1/4” Euro-Profile coupling	**10730504**
4120 Plus Air regulator filter with BSP 1/4” Nitto coupling (exclusive in Asia)	**10730503**

Mechanized body from solid aluminum

No diecast parts inside. High strength elements. Longer durability. Oversized air holes, bigger air flow and minimum pressure drops.

Machined aluminum vessel

High resistance anodized. Maximum durability. Minimum maintenance.

Oversized regulating wheel

Easy to use, even with gloves.

Anodized to avoid rusting

Not painted. Anodizing makes it to last longer. Very high resistance to rusting and any other chemical attack.

High quality and easy to read manometer

Double scale: bar and psi.

Automatic draining system

Automatic drain of condensed liquids without any handling.

4000 range purifying filter

Sagola 4220 PLUS purifying filter spare parts

SAGOLA is synonymous with quality and service. For this reason, SAGOLA provides a comprehensive spare parts and service guarantee, ensuring the proper maintenance of all its products, even those sold more than 10 years ago.
To ensure the best possible results and a high-quality finish, the spray gun must be thoroughly cleaned after each use and periodically checked for damaged or worn components. Any damaged or worn parts must be replaced.

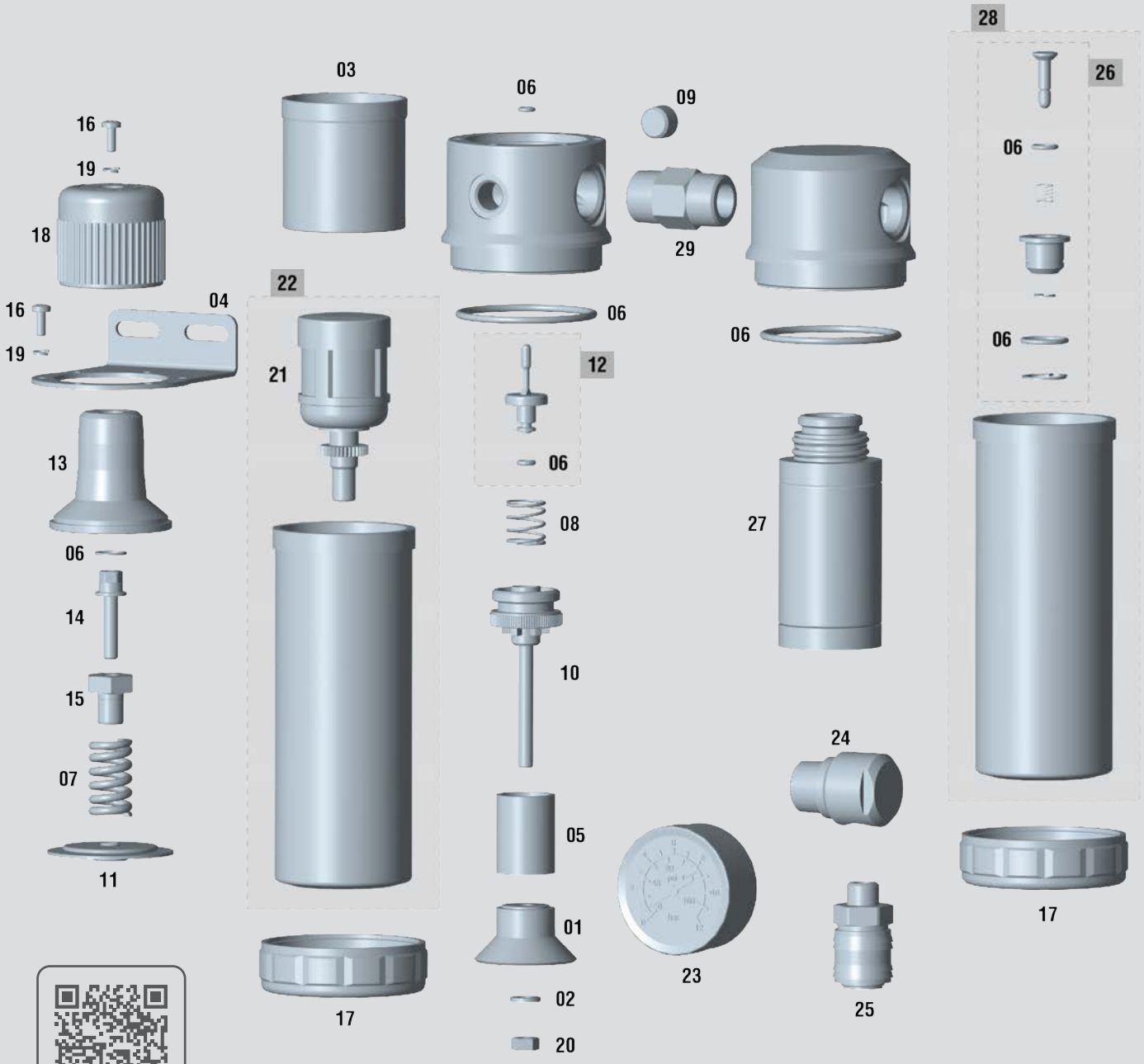

Latest updated version of the exploded view Sagola 4220 PLUS

This exploded view is not the material list of the Filter

4000 range purifying filter

Sagola 4220 PLUS purifying filter spare parts

SPARE PARTS — **Sagola 4220 PLUS**

No.	Code	Description
01	50810028	Air deflector washer
02	50850408	Washer DIN 125 6.4 S. steel
03	51910719	Vessel insert bushing
04	53310211	Bracket
05	53610208	24 µ Sintered bronze filter
06	56418588	Gasket Kit
07	54710281	Cylindrical spring 18 x 31 x 3.5 mm.
08	54710283	Cylindrical spring 12 x 22 x 1.9 mm.
09	55752117	Top coupling 1/4” M DIN 906 S. steel
10	56310604	Support
11	56414305	Membrane
12	56417416	Air valve
13	57110205	Regulator bell lid
14	57212310	Regulation screw
15	57212311	Regulation nut

SPARE PARTS — **Sagola 4220 PLUS**

No.	Code	Description
16	57251305	Screw DIN 7985 M4x10 zinc plated
17	57410109	Vessel fastening nut
18	57810339	Pressure regulator wheel
19	80860703	Washer DIN 7980 4.1 blued
20	57450905	Nut DIN 934 M6x100 S. steel
21	56450010	Automatic drain
22	56417711	Vessel + Automatic drain
23	54550016	Gauge 12 1/4”
24	55712165	Top coupling 1/2” x14 M BSPT
25	11010531	Aluminium coupling BSPT 1/4” M -US-Mil
26	56418533	Semi-automatic drain
27	56418722	Coalescent filter
28	56417712	Vessel + Semi-automatic drain
29	55710247	Coupling 1/2” x 14 M - 1/2” x14 M

4000 Series filter Kit

Replacement filter kit for the 4220/4220 Plus filter.
(see page 154)

Coalescing filter kit

Sintered bronze filter kit 24 µ

Clean the filter correctly. Follow the cleaning steps in the instruction manual for proper operation of the equipment.

4000 range purifying filter

Sagola 4120 PLUS purifying filter spare parts

SAGOLA is synonymous with quality and service. For this reason, SAGOLA provides a comprehensive spare parts and service guarantee, ensuring the proper maintenance of all its products, even those sold more than 10 years ago.
To ensure the best possible results and a high-quality finish, the spray gun must be thoroughly cleaned after each use and periodically checked for damaged or worn components. Any damaged or worn parts must be replaced.

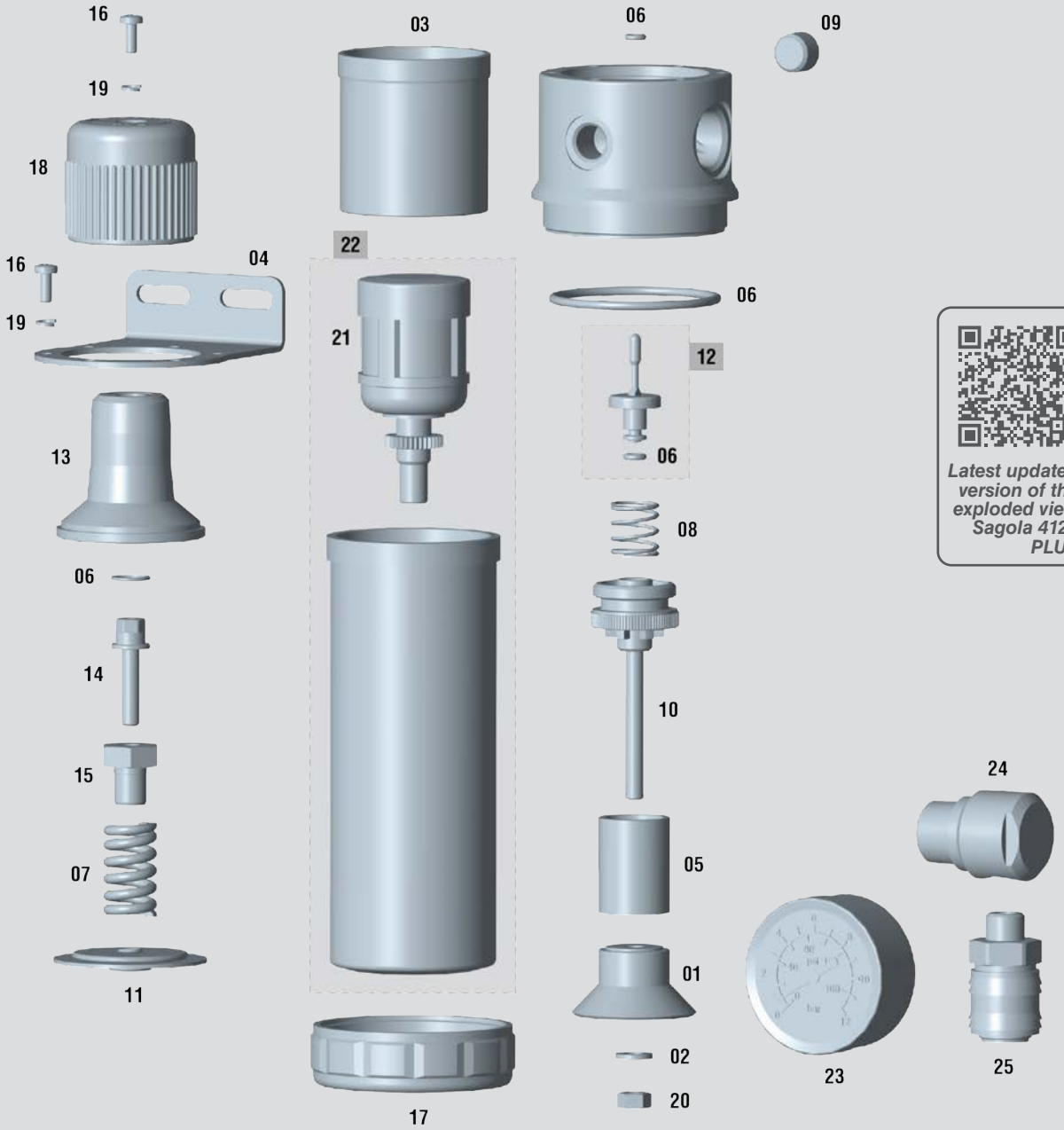

Latest updated version of the exploded view Sagola 4120 PLUS

This exploded view is not the material list of the Filter

4000 range purifying filter

Sagola 4120 PLUS purifying filter spare parts

SPARE PARTS — Sagola 4120 PLUS

No.	Code	Description
01	50810028	Air deflector washer
02	50850408	Washer DIN 125 6.4 S. steel
03	51910719	Vessel insert bushing
04	53310211	Bracket
05	56418721	24 µ Sintered bronze filter
06	56418588	Gasket Kit
07	54710281	Cylindrical spring 18 x 31 x 3.5 mm.
08	54710283	Cylindrical spring 12 x 22 x 1.9 mm.
09	55752117	Top coupling 1/4" M DIN 906 S. steel
10	56310604	Support
11	56414305	Membrane
12	56417416	Air valve
13	57110205	Regulator bell lid
14	57212310	Regulation screw
15	57212311	Regulation nut

SPARE PARTS — Sagola 4120 PLUS

No.	Code	Description
16	57251305	Screw DIN 7985 M4x10 zinc plated
17	57410109	Vessel fastening nut
18	57810339	Pressure regulator wheel
19	80860703	Washer DIN 7980 4.1 blued
20	57450905	Nut DIN 934 M6x100 S. steel
21	56450010	Automatic drain
22	56417711	Vessel + Automatic drain
23	54550016	Gauge 12 1/4"
24	55712165	Top coupling 1/2" x14 M BSPT
25	11010531	Aluminium coupling BSPT 1/4" M -US-Mil

4000 Series filter Kit

Replacement filter kit for the 4120/4120 Plus filter.
(see page 154)

Sintered bronze filter kit 24 µ

Clean the filter correctly. Follow the cleaning steps in the instruction manual for proper operation of the equipment.

Plus range filters

Sagola professional range in regulators, air purifiers, and air lubricators. Plus range has been exclusively designed and manufactured for professional use, it gathers high standard in performance and design.

Solid and mecanized aluminium body

We do not use cast parts. Sturdy elements. High durability. Over air paths size offering higher flow and minimum pressure drop.

Anodising treatment against oxidation

Painting to protect elements is avoided. This gives us endless life. Very high resistance to oxidation or other chemical attack.

Easy reading pressure gauge

Double scale bar/psi gauge.

Semi-automatic draining systems

No manual draining.

Regulation handle

Oversized. Easy manipulations, even with gloves.

Policarbonate vessel

High-resistant and high transparency. Does not yellow over time.

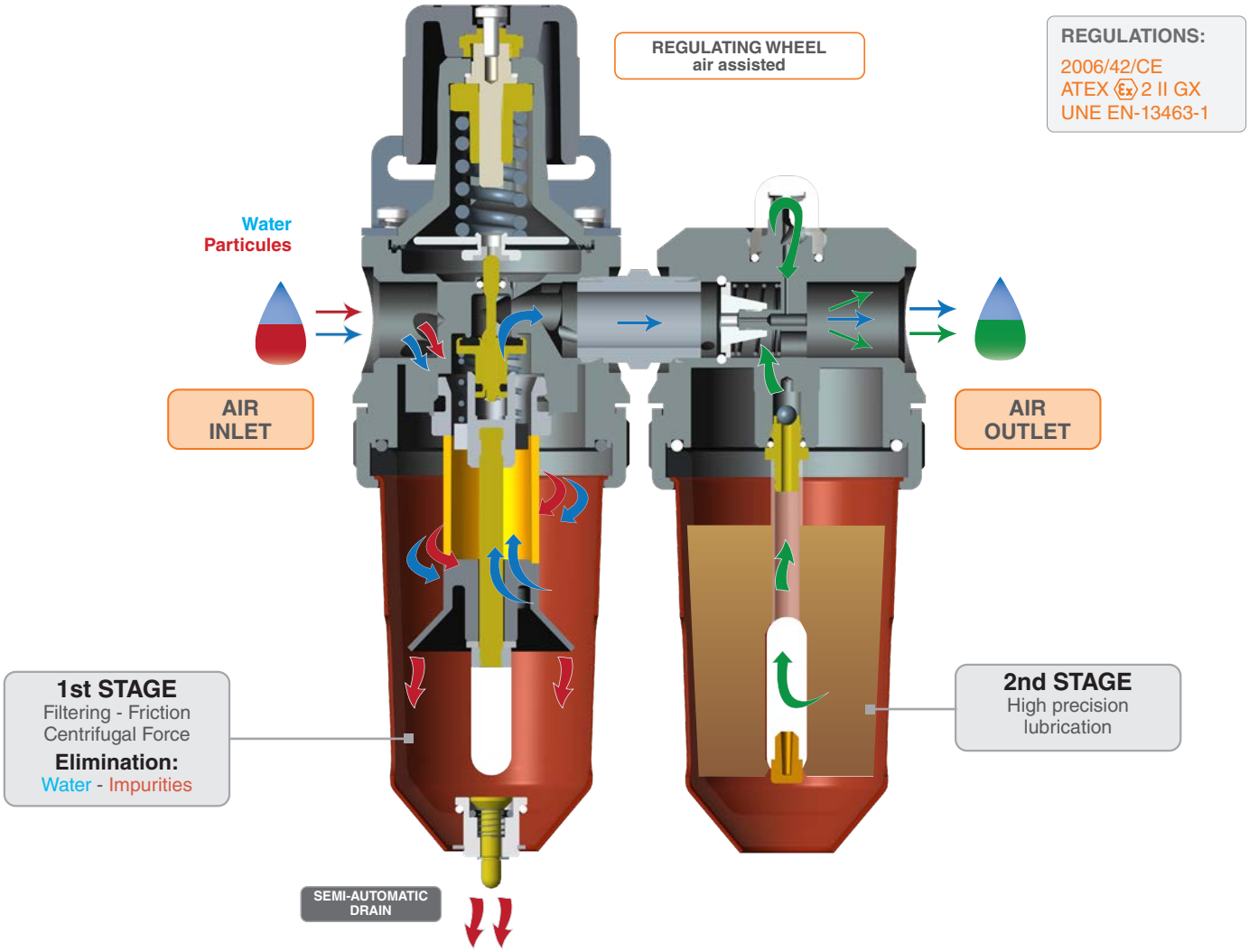

The **Plus filter range** lubrication system offers maximum smoothness of operation, maximum precision. Easy release, automatic pressure drop.

Air assisted regulator and continuous air supply.

Aluminium body. CNC mechanized. Sturdy build. Liquid and impurities holding.

Plus range filters

Sagola 479 Plus Filter

The most compact solution for the small workshops, industry or priming and preparation areas.

Large air flow, maximum reliability regulating system, high quality pressure gauge, the best materials. Don't undervalue your small painting works or reduce the life of your pneumatic tools by using poor quality regulators and no filtration capacity.

Adaptable to any size of hose. It comes with reducers. Produced from a solid aluminium block, great filtrating capacity with check window for waste particle and semi-automatic drain system, it has everything in a minimum space.

Sagola 970 Plus Filter

The virtues of the regulator-filter 479+ is now linked to a lubricating element, setting itself apart as specific workshop equipment. It supplies clean, lubricated air to all your pneumatic tools.

Accurate control of the oil content by means of a "drop-by-drop" hand regulator, zero pressure loss thanks to the in-line design, maximum reliability and productivity in the most compact package.

Assure the supply of clean air and properly lubricated to tools and pneumatic engines.

TECHNICAL DATA	479 PLUS		970 PLUS	
Weight	0.72 Kg.	1.58 lbs	1.24 Kg.	2.72 lbs
Dimensions	22.5 x 6.5 x 8.5 cm	8.86 x 2.56 x 3.35"	22.5 x 14 x 8.5 cm	8.86 x 5.5 x 3.35"
Air flow at 2 bar (29 psi)	1,700 L/min.	60 cfm	1,920 L/min.	68 cfm
Connections	1/2", 3/8", 1/4"		1/2", 3/8", 1/4"	
Filtering type	**1st** 40 µ bronze filter		**1st** 40 µ bronze filter	
Maximun working pressure	10 bar	145 psi	10 bar	145 psi
Maximum working temperature	90°C	194°F	90°C	194°F
Drain system	Automatic drain		Semi-automatic drain	

VERSIONS

Description	Code
479 Plus air regulator filter with 1/2" connection	**10730401**
479 Plus air regulator filter with 3/8" connection	**10730402**
479 Plus air regulator filter with 1/4" connection	**10730403**
970 Plus air lubricator regulator filter with 1/2" connection	**10750301**
970 Plus air lubricator regulator filter with 3/8" connection	**10750302**
970 Plus air lubricator regulator filter with 1/4" connection	**10750303**

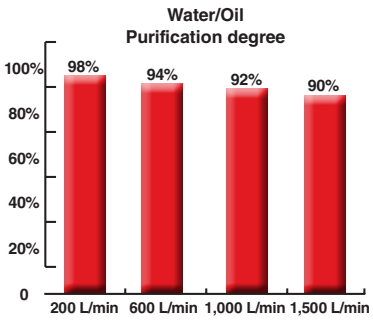

Plus range filters

Sagola 430 Plus regulator

Mini air regulator. Small, robust, reliable and long lasting. Mechanized from a solid aluminium block.

Diaphragm regulator from 0 to 10 bar. High pressure regulator. Quality pressure gauge up to 10 bar. Double scale bar/psi.

Stand included for assembly on the wall. Standard adaptors and fittings included. Quick release and short shift wheel.

Sagola 439 Plus Filter

High flow filter for insertion in air lines. Suitable for all type of installations, accessories included. Made of aluminium. High-durability.

Check window for waste liquids. Semi-automatic drain system. Minimum pressure loss.

Minimum maintenance.

Sagola 437 Plus Lubricator

Ideal for the proper lubrication of pneumatic tools. Multiple inlet and outlet dimensions (1/2", 3/8" and 1/4"). Oil level check window.

Manual oil regulator by level check window, "drop by drop" system. CNC mechanized from a solid aluminium block. Made of aluminium, as the whole Plus range.

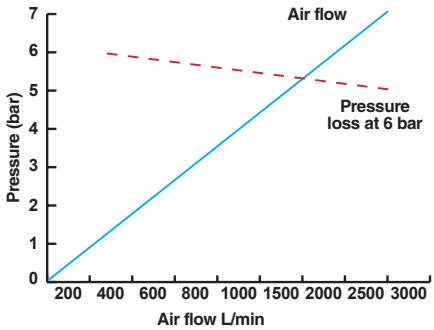

TECHNICAL DATA	430 PLUS		439 PLUS		437 PLUS	
Weight	0.54 Kg.	1.19 lbs	0.55 Kg.	1.21 lbs	0.48 Kg.	1.06 lbs
Dimensions	10.7 x 6.5 x 11.5 cm 4.21 x 2.56 x 4.53"		15.8 x 7.3 x 7.3 cm 6.22 x 2.87 x 2.87"		16.5 x 7.3 x 7.3 cm 6.50 x 2.87 x 2.87"	
Air flow at 2 bar (29 psi)	1,200 - 1,700 L/min.	42 - 60 cfm	1,280 L/min.	45 cfm	1,920 L/min.	68 cfm
Connections	1/2", 3/8", 1/4"		1/2", 3/8", 1/4"		1/2", 3/8", 1/4"	
Filtering type	-		**1st** 40 µ bronze filter		-	
Maximun working pressure	10 bar	145 psi	10 bar	145 psi	10 bar	145 psi
Maximum working temperature	90°C	194°F	90°C	194°F	90°C	194°F
Drain system	-		Semi-automatic drain		Semi-automatic drain	

VERSIONS

Description	Code
430 Plus micro air regulator with 1/2" connection	**10740501**
430 Plus micro air regulator with 3/8" connection	**10740502**
430 Plus micro air regulator with 1/4" connection	**10740503**
439 Plus air filter with 1/2" connection	**10720401**
439 Plus air filter with 3/8" connection	**10720402**
439 Plus air filter with 1/4" connection	**10720403**

VERSIONS

Description	Code
437 Plus Lubricator with 1/2" connection	**10710301**
437 Plus Lubricator with 3/8" connection	**10710302**
437 Plus Lubricator with 1/4" connection	**10710303**

Plus range filters

Sagola 430 PLUS regulator and Sagola 439 PLUS filter spare parts

SAGOLA is synonymous with quality and service. For this reason, SAGOLA provides a comprehensive spare parts and service guarantee, ensuring the proper maintenance of all its products, even those sold more than 10 years ago.
To ensure the best possible results and a high-quality finish, the spray gun must be thoroughly cleaned after each use and periodically checked for damaged or worn components. Any damaged or worn parts must be replaced.

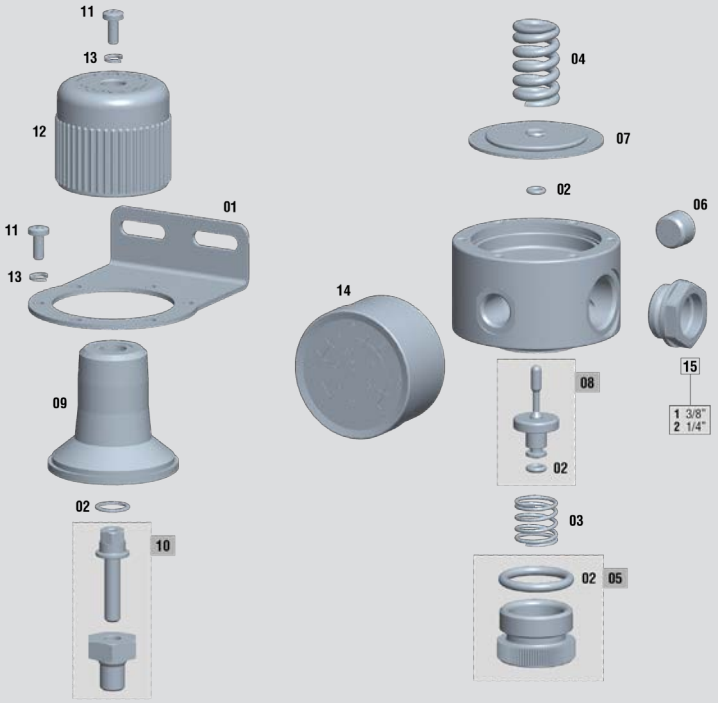

Latest updated version of the exploded view Sagola 430 PLUS

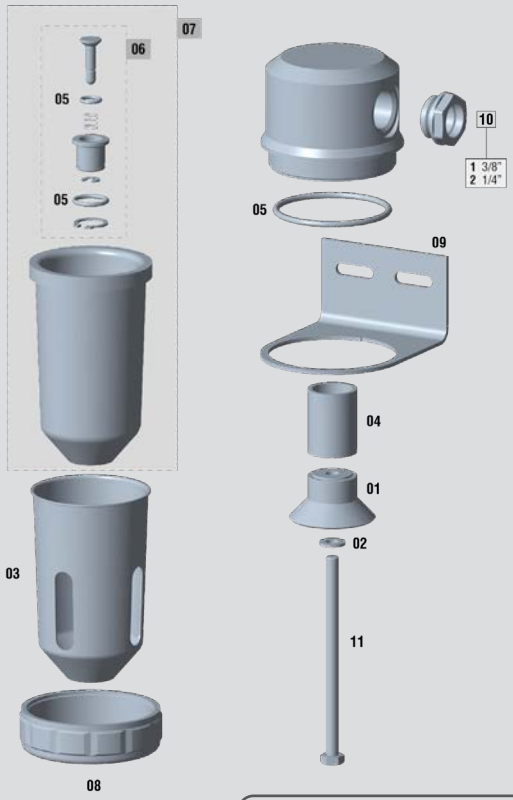

Latest updated version of the exploded view Sagola 439PLUS

SPARE PARTS — Sagola 430 PLUS

No.	Code	Description
01	53310211	Bracket
02	56418523	Gasket Kit
03	54710283	Spring 12 x 22 x 1.9
04	54710281	Spring 18 x 31 x 3.5
05	56414920	Top coupling + Pressure regulator gasket
06	55752117	Top coupling 1/4” M DIN 906 A2 S. Steel
07	56414305	Membrane
08	56417416	Air valve
09	57110205	Regulator bell lid
10	56410084	Regulation Screw + Nut Kit
11	57251305	Screw DIN 7985 M4x10
12	57810339	Pressure regulator wheel
13	80860703	Washer DIN 7980 blued
14	54550016	Gauge 12 1/4”
15/1	11000112	Connection 1/2" M - 3/8" F (2 units)
15/2	11000113	Connection 1/2" M - 1/4" F (2 units)

SPARE PARTS — Sagola 439 PLUS

No.	Code	Description
01	50810028	Air deflector washer
02	50850408	Washer DIN 125 6.4 S. Steel
03	52710313	Protective casing
04	53610204	Porous bronze filter 40 µ
05	56418529	O-ring kit
06	56418530	Complete semi-automatic drain Kit
07	56417708	Vessel + semi-automatic drain
08	57410109	Vessel fastening nut
09	53310201	Bracket
10/1	11000112	Connection 1/2” M - 3/8” F (2 units)
10/2	11000113	Connection 1/2” M - 1/4” F (2 units)
11	57251025	Screw DIN 933 M6 x 100 S. Steel

This exploded view is not the material list of the Filter

Plus range filters

Sagola 437 PLUS lubricaator and Sagola 970 PLUS filter spare parts

SAGOLA is synonymous with quality and service. For this reason, SAGOLA provides a comprehensive spare parts and service guarantee, ensuring the proper maintenance of all its products, even those sold more than 10 years ago.
To ensure the best possible results and a high-quality finish, the spray gun must be thoroughly cleaned after each use and periodically checked for damaged or worn components. Any damaged or worn parts must be replaced.

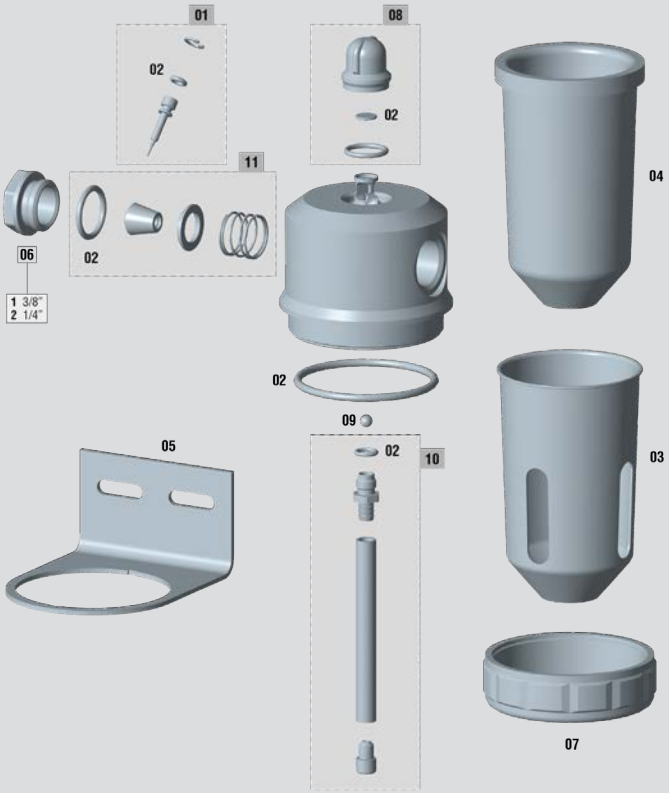

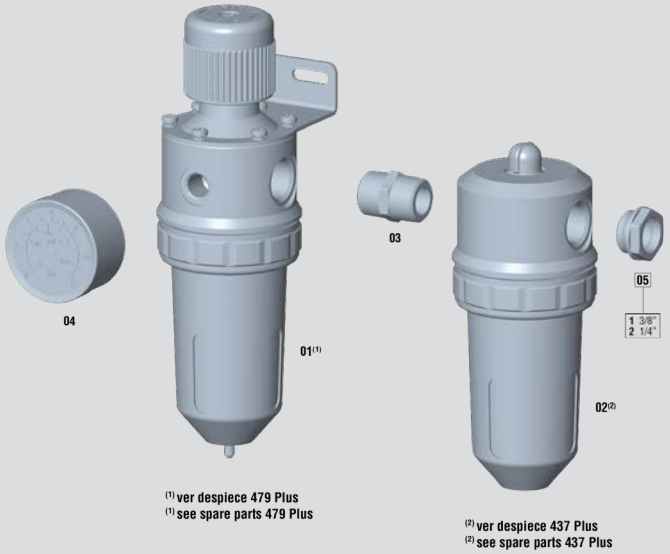

Latest updated version of the exploded view Sagola 437 PLUS

Latest updated version of the exploded view Sagola 970 PLUS

SPARE PARTS — Sagola 437 PLUS

No.	Code	Description
01	56418528	Choke Kit
02	56418527	O-ring Kit
03	52710313	Protective casing
04	52840503	Vessel deposit
05	53310201	Bracket
06/1	11000112	Connection 1/2" M - 3/8" F (2 units)
06/2	11000113	Connection 1/2" M - 1/4" F (2 units)
07	57410109	Vessel fastening nut
08	56410083	Visor Kit
09	51250114	Steel ball DIN 5401 5 mm.
10	56417134	Absorption tube Kit
11	56417417	Air valve

SPARE PARTS — Sagola 970 PLUS

No.	Code	Description
01	10730401	479 PLUS Purifier-regulator
02	10710301	437 PLUS Lubrificator
03	11000102	Connection 1/2" M-M (2 units)
04	54550016	Gauge 12 1/4”
05/1	11000112	Connection 1/2" M - 3/8" F (2 units)
05/2	11000113	Connection 1/2" M - 1/4" F (2 units)

This exploded view is not the material list of the Filter

Plus range filters

Sagola 479 PLUS filter spare parts

SAGOLA is synonymous with quality and service. For this reason, SAGOLA provides a comprehensive spare parts and service guarantee, ensuring the proper maintenance of all its products, even those sold more than 10 years ago.
To ensure the best possible results and a high-quality finish, the spray gun must be thoroughly cleaned after each use and periodically checked for damaged or worn components. Any damaged or worn parts must be replaced.

Latest updated version of the exploded view Sagola 479 PLUS

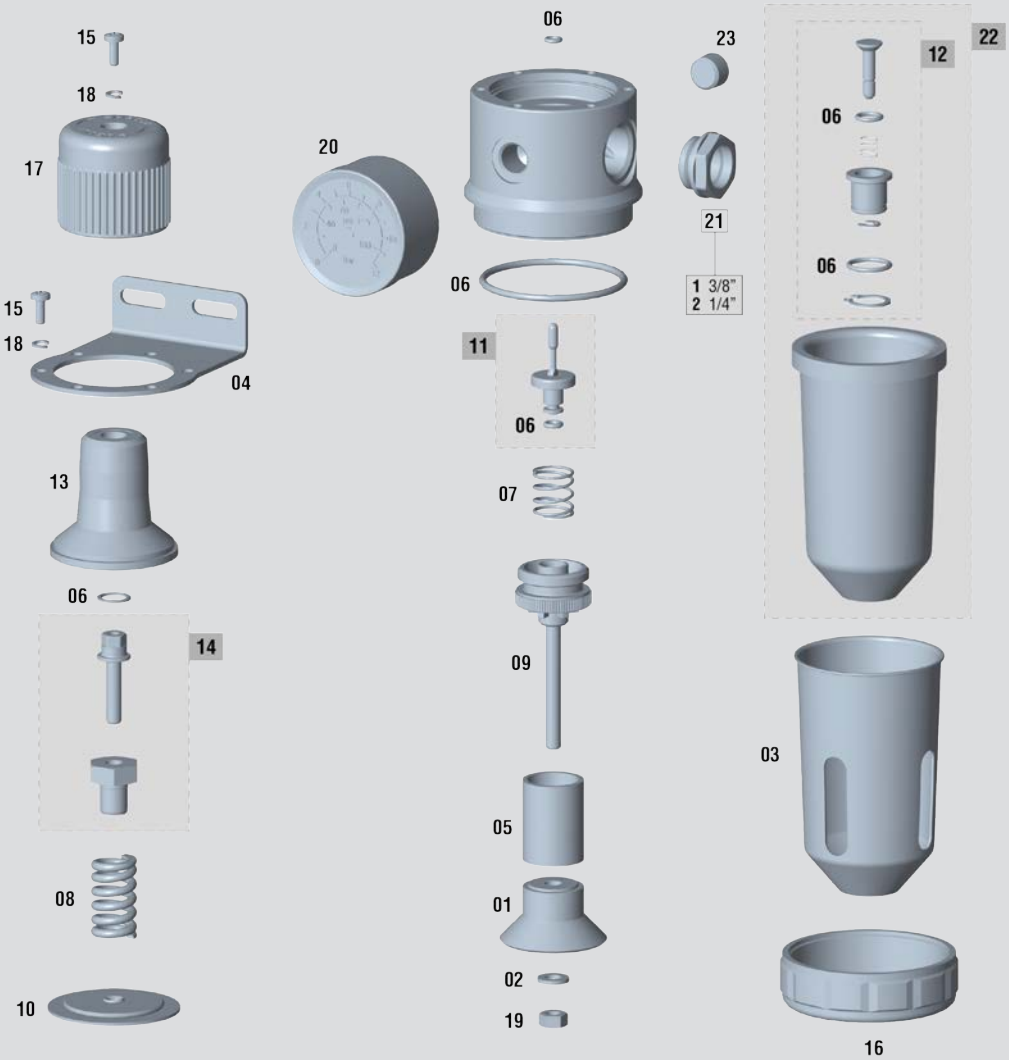

SPARE PARTS — Sagola 479 PLUS

No.	Code	Description
01	50810028	Air deflector washer
02	50850409	Washer DIN 125 S. Steel
03	52710313	Protective casing
04	53310211	Bracket
05	53610204	Porous bronze filter 40 µ
06	56418531	Gasket Kit
07	54710283	Spring 12 x 22 x 1.9
08	54710281	Spring 18 x 31 x 3.5
09	56310604	Air filter support
10	56414305	Membrane
11	56417416	Air valve
12	56418530	Complete semi-automatic drain Kit
13	57110205	Regulator bell lid

SPARE PARTS — Sagola 479 PLUS

No.	Code	Description
14	56410084	Regulation Screw + Nut Kit
15	57251305	Screw DIN 7985 M4x10
16	57410109	Vessel fastening nut
17	57810339	Pressure regulator wheel
18	80860703	Washer DIN 7980 blued
19	57450905	Nut DIN 934 M6x100 S. Steel
20	54550016	Gauge 12 1/4”
21/1	11000112	Connection 1/2" M - 3/8" F (2 units)
21/2	11000113	Connection 1/2" M - 1/4" F (2 units)
22	56417708	Vessel + semi-automatic drain
23	55752117	Top coupling 1/4” M DIN 906 A2 S. Steel

SAGOLA

06

Compressed air complements

Anti-static hoses, connectors, quick couplings, couplings and seals are elements which complement a good tool with safe, quality work for the painter and panel beater.

The weakest link breaks the chain, we are aware of that here in SAGOLA, and no concessions are made in our accessories range. A safe bet for your professional needs.

Air hose

Anti-static air hose

Anti-static compressed air hose ideal for painting in the booth. Light, flexible and manageable. Twist free.

EPDM rubber hose with exterior textile reinforcement

High security crimped ends able to bear the high temperatures of the booth. No need to use flanges, avoiding that they release or cause leaks due to dilation.

8 mm. inner diameter. Valid to work with high flow HVLP sprayguns.

1/4" F couplings with conical closure and flare fitting for easy assembly of the push connector.

REGULATIONS:
97/23/CE
UNE EN-559

TECHNICAL DATA — ANTI-STATIC AIR HOSE

Temperature range	-40°C to 120°C	-40°F to 248°F	
Maximun working pressure	20 bar	290 psi	
Breakage pressure	80 bar	1,160 psi	
Material (inside)	EPDM (Ethylene Propylene Diene type M ASTM)		
Material (outside)	Textile reinforcement	Colour	Blue
Connections	BSP 1/4" F couplings with conical closure and flare fitting		
Conducting pipe	< 1 M Ω		

VERSIONS

Description	Code	US-Mil Code	Euro-Profile Code
6 m. Anti-static air hose Ø 8 x 15 mm.	**56414024**	-	-
11 m. Anti-static air hose Ø 8 x 15 mm.	**56414025**	**56414047**	**56414049**
16 m. Anti-static air hose Ø 8 x 15 mm.	**56414027**	**56414048**	**56414050**
26 m. Anti-static air hose Ø 8 x 15 mm.	**56414026**	-	-

Air hose

Multi-use hose. Compact with excellent performance and oil resistance. 8 x 15 mm. hose in different lengths and in rolls of 100 meters. Made of Thermorubber with external Polyester reinforcement. 8 mm. inner diameter. Valid to work with high flow HVLP sprayguns.

REGULATIONS:
97/23/CE

Working pressure: 20 bar (60 bar of breakage pressure).

Temperature range: de -15°C to 60°C

VERSIONS

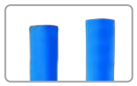

Description	Code	US-Mil Code	Euro-Profile Code
100 m. Air hose roll Ø 8 x 15 mm.	**52450008**	-	-
11 m. Air hose Ø 8 x 15 mm.	-	**56414051**	**56414053**
16 m. Air hose Ø 8 x 15 mm.	-	**56414052**	**56414054**

Air hose with connections available in 11 and 16 m.

Air and product hoses

Air and product hose set

Hose set for low pressure pneumatic pumps.

6 x 8 mm. Nylon product hose with quick connect terminals. Adapter 3/8 ” female for pressure sprayguns.

EPDM rubber anti-static air hose 8 x 15 mm. with high security crimped ends 1/4 ” F.

Nylon protective cover of high resistance to friction and abrasion.

REGULATIONS:
97/23/CE
UNE EN-559

REGULATIONS:
Air hose: 97/23/CE, UNE EN-559
Product hose: DIN 73378
Cover: RoHS, ISO 6945, MSHA

TECHNICAL DATA — AIR AND PRODUCT HOSE SET

Temperature range (hoses)	-20°C to 60°C	-4°F to 140°F
Temperature range (cover)	-60°C to 125°C	-76°F to 257°F

	Product hose	Air hose	Cover
Maximun working pressure	18 bar (261 psi)	20 bar (290 psi)	-
Breakage pressure	-	60 bar (870 bar)	-
Material (inside)	Polyamide PA12	EPDM	Polyester
Material (outside)	Polyamide PA12	Textile reinforcement	Polyester
Colour	White	Blue	Black
Anti-static	-	OK	-
Connections	3/8” coupling	1/4” coupling	-

VERSIONS

Description	Code
1.8 m. Hose set. Ø 8 x 15 mm. air hose and Ø 6 x 8 mm. product hose + protective cover	56414130
5 m. Hose set. Ø 8 x 15 mm. air hose and Ø 6 x 8 mm. product hose + protective cover	56414039
7.5 m. Hose set. Ø 8 x 15 mm. air hose and Ø 6 x 8 mm. product hose + protective cover	56414044
10 m. Hose set. Ø 8 x 15 mm. air hose and Ø 6 x 8 mm. product hose + protective cover	56414040
15 m. Hose set. Ø 8 x 15 mm. air hose and Ø 6 x 8 mm. product hose + protective cover	56414041
20 m. Hose set. Ø 8 x 15 mm. air hose and Ø 6 x 8 mm. product hose + protective cover	56414042

Quick couplings and connectors

Quick couplings

The new range of plugs SAGOLA presents cutting-edge design. SAGOLA offers a wide range that gives cover 100% of market requirements. Is incorporated security versions. All steel and aluminum plugs are BSP; Males (BSPT) and females (BSPP).

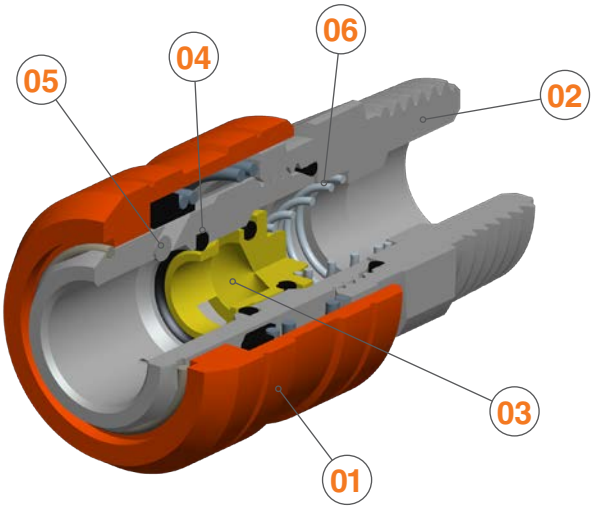

Plug body made of treated steel and valve made of brass. So a guaranteed life of more than 1,500,000 uses. The new range of plugs SAGOLA incorporates a handle made of composite, which gives a high resistance to both attrition and drag. Attrition resistance tested in more than 48,000 impacts and the equivalent to a crawl 12 km.

1. **SHOOTER** made of composite with a weight reduction and extraordinary durability against impact.

2. **BODY PLUG** made of steel with anticorrosive treatment.

3. **VALVES** Brass valve manufactured, specific to work at high temperatures.

4. **JOINTS** Nitrile Butadiene. Operating temperature range: -20°C +100°C.

5. **PINS** made of tempered high strength steel that guarantees the absence of attrition.

6. **SPRING** made of stainless steel.

US-Mil range — ULTRA LIGHT (45 grams)

Quick coupling
US-Mil RANGE
Flow: 68 m³/h. - 1,133 L/min.
Body and shooter made of high strength **aluminum**. Valve made of brass. Pins made of high strength steel.
Air coupling: 1/4”

Code	Version
11010531	BSPT 1/4”

Code	Version
11010431	BSPP 1/4”

Code	Version
11010629	Barb. 8 mm.

US-Mil range — STANDARD

Quick coupling
US-Mil RANGE
Flow: 68 m³/h. - 1,133 L/min.
Simple shutter plug, made of hardened **steel** with gasket made of Nitrile Butadiene. Its excellent sealing prevent dirt penetrates inside. High strength sleeve.

Code	Version
11010524	BSPT 1/4”
11010525	BSPT 3/8”
11010526	BSPT 1/2”

Code	Version
11010424	BSPP 1/4”
11010425	BSPP 3/8”
11010426	BSPP 1/2”

Code	Version
11010624	Barb. 8 mm.
11010625	Barb. 10 mm.

25 UNITS					
11010527	BSPT 1/4”	11010427	BSPP 1/4”	11010626	Barb. 8 mm.

US-Mil range — SAFETY

Quick coupling
US-Mil RANGE
Flow: 68 m³/h. - 1,133 L/min.
Plug made of hardened **steel** with gasket made of Nitrile Butadiene and double effect opening. Anti-whiplash safety plug according to ISO-4414. Two movements “push-pull” to disconnect.
High strength sleeve.

Code	Version
11010528	BSPT 1/4”
11010529	BSPT 3/8”
11010530	BSPT 1/2”

Code	Version
11010428	BSPP 1/4”
11010429	BSPP 3/8”
11010430	BSPP 1/2”

Code	Version
11010627	Barb. 8 mm.
11010628	Barb. 10 mm.

Quick couplings and connectors

Quick couplings

Euro-Profile range

STANDARD

Quick coupling
Euro Profile RANGE
Flow: 85 m³/h. - 2,000 L/min.
Simple shutter plug, made of hardened **steel** with gasket made of Nitrile Butadiene. Its excellent sealing prevent dirt penetrates inside. High strength sleeve.
Air coupling: 7.6 mm.

Code	Version
11010823	BSPT 1/4”
11010824	BSPT 3/8”
11010825	BSPT 1/2”

Code	Version
11010723	BSPP 1/4”
11010724	BSPP 3/8”
11010725	BSPP 1/2”

Code	Version
11010924	Barb. 8 mm.
11010923	Barb. 10 mm.

Euro-Profile range

SAFETY

Quick coupling
Euro Profile RANGE
Flow: 85 m³/h. - 2,000 L/min.
Plug made of hardened **steel** with gasket made of Nitrile Butadiene and double effect opening. Anti-whiplash safety plug according to ISO-4414. Two movements “push-pull” to disconnect.
High strength sleeve.
Air coupling: 7.6 mm.

Code	Version
11011323	BSPT 1/4”
11011324	BSPT 3/8”
11011325	BSPT 1/2”

Code	Version
11011423	BSPP 1/4”
11011424	BSPP 3/8”
11011425	BSPP 1/2”

Code	Version
11011523	Barb. 8 mm.
11011524	Barb. 10 mm.

Multi-Profile range

3x1 system. Compatibility: US-MIL/EUROPROFILE/ITALIAN PROFILE STANDARD

Quick coupling
Multi Profile RANGE
FLow: 85 m³/h. - 2,000 L/min.
Simple shutter plug, made of **steel** with gasket made of Nitrile Butadiene. Its excellent sealing prevent dirt penetrates inside.
Air coupling: 8 mm.

Code	Version
11010826	BSPT 1/4”
11010827	BSPT 3/8”

Code	Version
11010726	BSPP 1/4”
11010727	BSPP 3/8”

Code	Version
11010925	Barb. 8 mm.
11010926	Barb. 10 mm.

Nitto range

ASIA-PACIFIC market exclusive profile STANDARD

Quick coupling
Nitto RANGE
FLow: 85 m³/h. - 2,000 L/min.
Simple shutter plug, made of **steel** with gasket made of Nitrile Butadiene. Its excellent sealing prevent dirt penetrates inside.
Air coupling: 8 mm.

Code	Version
11011701	BSPT 1/4”
11011702	BSPT 3/8”

Code	Version
11011801	BSPP 1/4”
11011802	BSPP 3/8”

Code	Version
11011901	Barb. 8 mm.
11011902	Barb. 10 mm.

US-Mil range

Brass plug STANDARD

Quick coupling
US-Mil RANGE
Spec C-4109
Flow: 600 L/min.
Versatile. Simple blocking plug made of **brass** with Buna N gasket. Its excellent sealing avoids the penetration of impurities to the inside. Fully compatible with earlier lines of SAGOLA plugs.

Code	Version
11010520	BSPT 1/4”
11010521	BSPT 3/8”
11010522	BSPT 1/2”

Code	Version
11010420	BSPP 1/4”
11010421	BSPP 3/8”
11010422	BSPP 1/2”

Code	Version
11010621	Barb. 8 mm.
11010622	Barb. 10 mm.

25 UNITS	11010523	BSPT 1/4”	11010423	BSPP 1/4”	11010623	Barb. 8 mm.

Quick couplings and connectors

Quick connectors

The size 2 plug is the most commonly used push plug in paint and body shops, and also in industry for the connection of all kinds of pneumatic tools. Silicone free. All springs, valves and pins made of stainless steel. All SAGOLA connectors are manufactured in high carbon steel making them extremely strong and stress resistant.

US-Mil range

Connector without balocker. Made of steel.

Quick connector
US-Mil RANGE
Spec C-4109 (2 units)
Air coupling: 5,5 mm.
Fully compatible with earlier lines of SAGOLA plugs. Made of high-carbon **steel**. Anti-corrosive nickel etched finish. Connector without blocker.

Code	Version
11020420	BSPT 1/4”
11020421	BSPT 3/8”
11020422	BSPT 1/2”

Code	Version
11020520	BSPP 1/4”
11020521	BSPP 3/8”
11020522	BSPP 1/2”

Code	Version
11020621	Barb. 8 mm.
11020622	Barb. 10 mm.

50 UNITS

11020423	BSPT 1/4”	
11020524	BSPP 1/4”	
11020623	Barb. 8 mm.	

US-Mil range

Orientable connector.

Orientable Quick connector
US-Mil RANGE (2 units)
Air coupling: 5,5 mm.
Exclusive rotating dial system, for greater freedom of movement. Made of high-carbon **steel**. Anti-corrosive nickel etched finish. Connector without blocker.

Code	Version
11020523	BSPP 1/4”

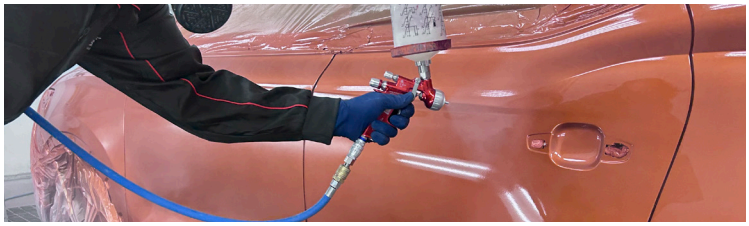

Code
70000011

Plugs display box

Sagola plugs and connectors range sampler.

Euro-Profile range

Maximum performance and durability in high production workshops

Quick connector
Euro-Perofile RANGE (2 units)
High flow. Air coupling: 7-8 mm.
Made of high-carbon **steel**. Anti-corrosion blue galvanized finish.
Connector without blocker.

Code	Version
11020710	BSPT 1/4”
11020721	BSPT 3/8”
11020722	BSPT 1/2”

Code	Version
11020810	BSPP 1/4”
11020821	BSPP 3/8”
11020822	BSPP 1/2”

Code	Version
11020921	Barb. 8 mm.
11020922	Barb. 10 mm.

Nitto range

ASIA-PACIFIC market exclusive profile

Quick connector
Nitto RANGE (2 units)
High flow. Air coupling: 7-8 mm.
Made of high-carbon **steel**. Anti-corrosion treatment. Connector without blocker.

Code	Version
11021001	BSPT 1/4”
11021002	BSPT 3/8”

Code	Version
11021101	BSPP 1/4”
11021102	BSPP 3/8”

Code	Version
11021201	Barb. 8 mm.
11021202	Barb. 10 mm.

Quick couplings and connectors

Connection coupling

High flow. Made of brass with anti-corrosive treatment. (2 units)

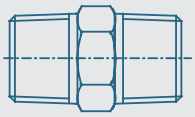

Code	Version
11000101	BSPT 1/4” M-M
11000102	BSPT 1/2” M-M
11000103	BSPT 3/8” M-M

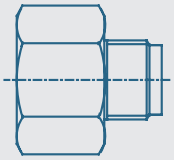

Code	Version
11000104	BSPT 1/2” M - 3/8” M
11000105	BSPT 3/8” M - 1/4” M
11000112	BSPT 1/2” M - 3/8” F
11000113	BSPT 1/2” M - 1/4” F

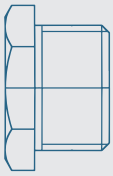

Code	Version
11000106	BSPP 1/2” H - 3/8” M
11000107	BSPP 3/8” H - 1/4” M
11000108	BSPP 3/8” M - 1/4” F

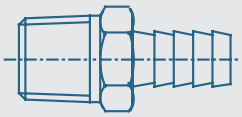

Code	Version
11000109	BSPT 1/2” M - Barb. 8 mm.
11000110	BSPT 3/8” M - Barb. 8 mm.
1100011	BSPT 1/4” M - Barb. 8 mm.

How to connect and disconnect the plug?

Standard plug connect and disconnect

1. Press until coupled

2. Pull the body as the arrow indicates

3. Disconnect the plug

Safety plug connect and disconnect

1. Move plug and tool as indicated by arrows

2. Push the plug

3. Pull the plug

4. Disconnect the plug

07

General application spray guns

Pneumatic tool of essential use in the body shop. Complete and high-quality service.

In this section we offer cord sealant guns, anti-gravel guns for underbody, blow guns and pressure check gun.

3900 Plus sealant guns

3900 Plus M6

3900 Plus M4

3900 Plus

3900 Plus sealant guns

The SAGOLA 3900 Plus pneumatic sealers are a compact, efficient and light solution for everyday needs in any workshop. These pneumatic guns are very useful when it comes to structure assembling, repairs and windshield set-ups, amongst others.

There are two versions: the 3900 Plus for sealants in cartridges and the 3900 Plus M4/6 for sealants in sausages. Both versions include a trigger with discharge valve, which guarantees a great precision and control.

The metallic internal parts assure a long working life. Besides, those parts do not require any manipulation neither any maintenance.

Its body is made of high resistance aluminum. The front part on the 3900 Plus is made of non-deformable plastic.

Very strong product capable to work for long working hours.

TECHNICAL DATA

Sagola 3900 PLUS

	3900 Plus		3900 Plus M4		3900 Plus M6	
Length	250 mm.	9.84”	250 mm.	9.84”	320 mm.	12.60”
Weight	650 g.	1.43 lbs	780 g.	1.72 lbs	965 g.	2.13 lbs
Air inlet connection	BSP 1/4” M		BSP 1/4” M		BSP 1/4” M	
Standard supply type	Cartridge		Sausages		Sausages	
Capacity	300 ml.	10.14 oz fl	300/400 ml.	10.1/13.5 oz fl	300/400/600 ml.	10.1/13.5/ 20.29 oz fl
Working pressure	4 - 6 bar	58 - 87 psi	4 - 6 bar	58 - 87 psi	4 - 6 bar	58 - 87 psi
Maximum air inlet pressure	10 bar	145 psi	10 bar	145 psi	10 bar	145 psi
Material on the front	Plastic		Anodized aluminum		Anodized aluminum	
Discharge valve	OK		OK		OK	

3900 Plus sealant guns

Sealant Gun main parts

01 AIR VALVE

02 AIR INLET

03 TRIGGER

04 ALUMINIUM BODY

05 ALUMINUM FRONT

06 PLASTIC FRONT

07 PISTON

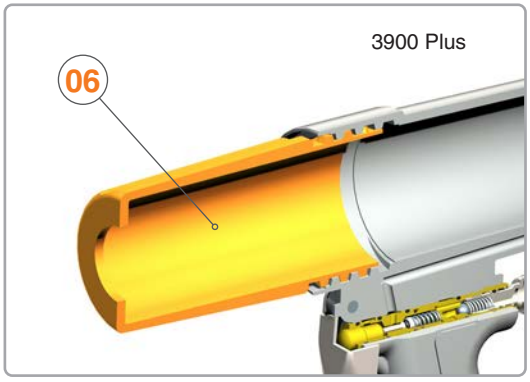

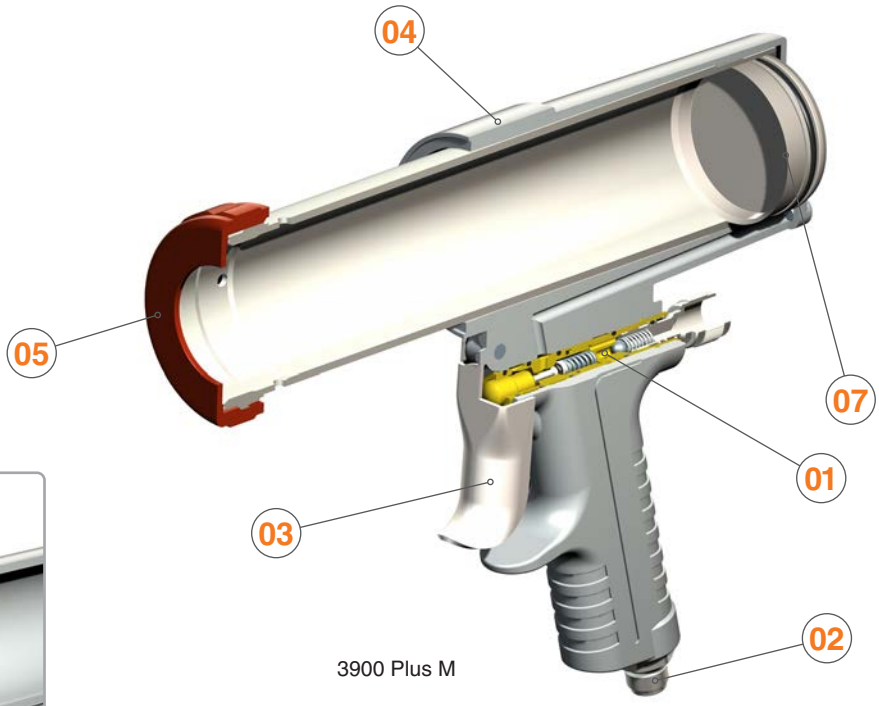

VERSIONS

Description	Code
3900 Plus sealant gun	10330201
3900 Plus M4 sealant gun	10330401
3900 Plus M6 sealant gun	10330402

Preparation of the cartridge or sausage

Cartridge praparation 3900 Plus

1. Cut the end of the cartridge and cap

2. Attach the cap to the cartridge

3. Remove the front cover and insert the cartridge

4. Close the deposit with the front cover

Sausage praparation 3900 Plus M

1. Cut off the end of the sausage

2. Remove the front cover of the deposit

3. Insert the cap

4. Place the sausage inside the deposit

5. Close the deposit with the front cover

3900 Plus sealant guns

Sagola 3900 Plus spare parts

SAGOLA is synonymous with quality and service. For this reason, SAGOLA provides a comprehensive spare parts and service guarantee, ensuring the proper maintenance of all its products, even those sold more than 10 years ago.
To ensure the best possible results and a high-quality finish, the spray gun must be thoroughly cleaned after each use and periodically checked for damaged or worn components. Any damaged or worn parts must be replaced.

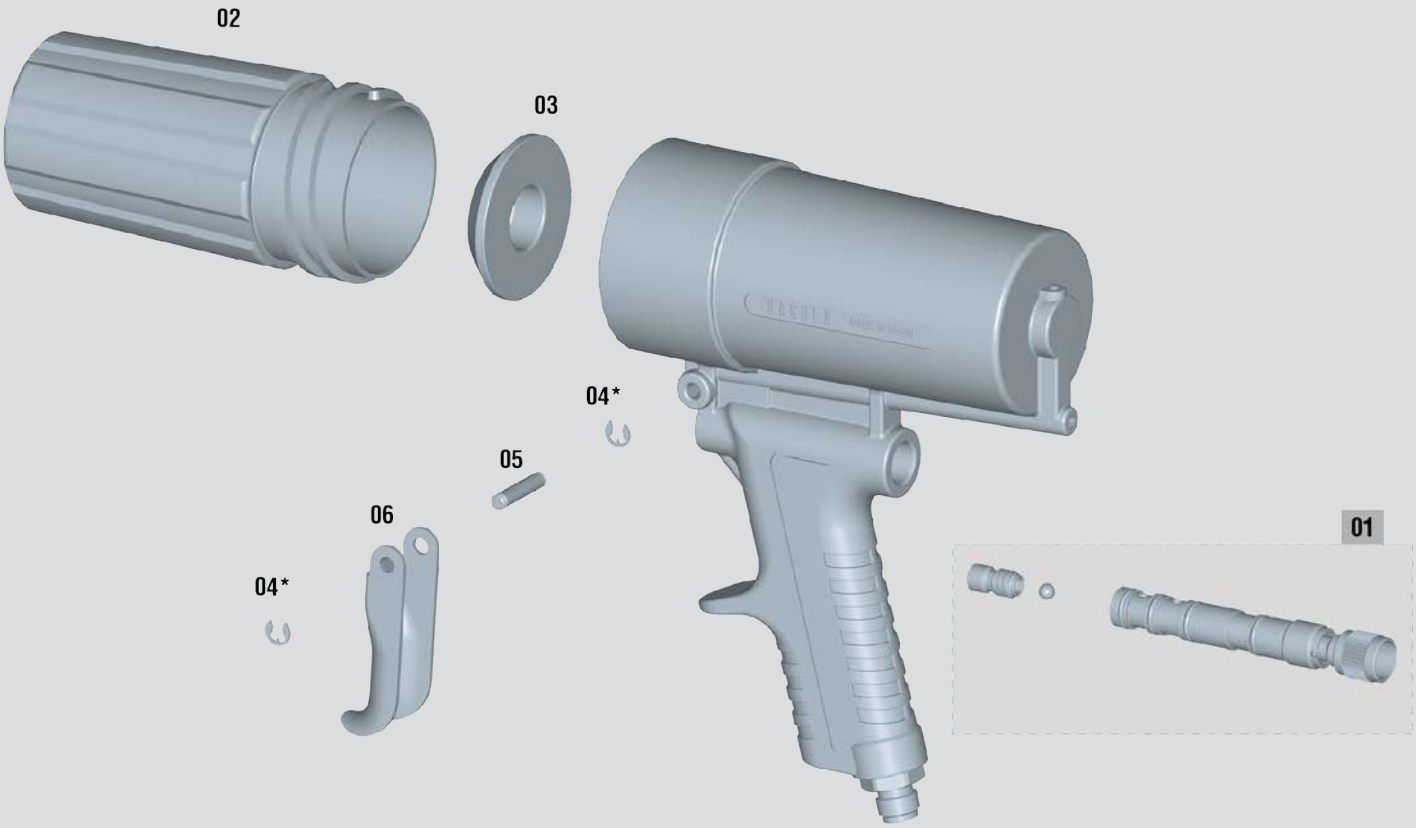

SPARE PARTS — **Sagola 3900 PLUS**

No.	Code	Description
01	56417206	Air valve Kit
02	57110704	Gun front cover (plastic)
03	50811110	End washer
04	50850604	Washer DIN 6799 RS 4 S. Steel
05	53110905	Trigger shaft slotted
06	53910107	Trigger

Latest updated version of the exploded view Sagola 3900 Plus

This exploded view is not the material list of the gun

3900 Plus sealant guns

Sagola 3900 Plus M spare parts

SAGOLA is synonymous with quality and service. For this reason, SAGOLA provides a comprehensive spare parts and service guarantee, ensuring the proper maintenance of all its products, even those sold more than 10 years ago.
To ensure the best possible results and a high-quality finish, the spray gun must be thoroughly cleaned after each use and periodically checked for damaged or worn components. Any damaged or worn parts must be replaced.

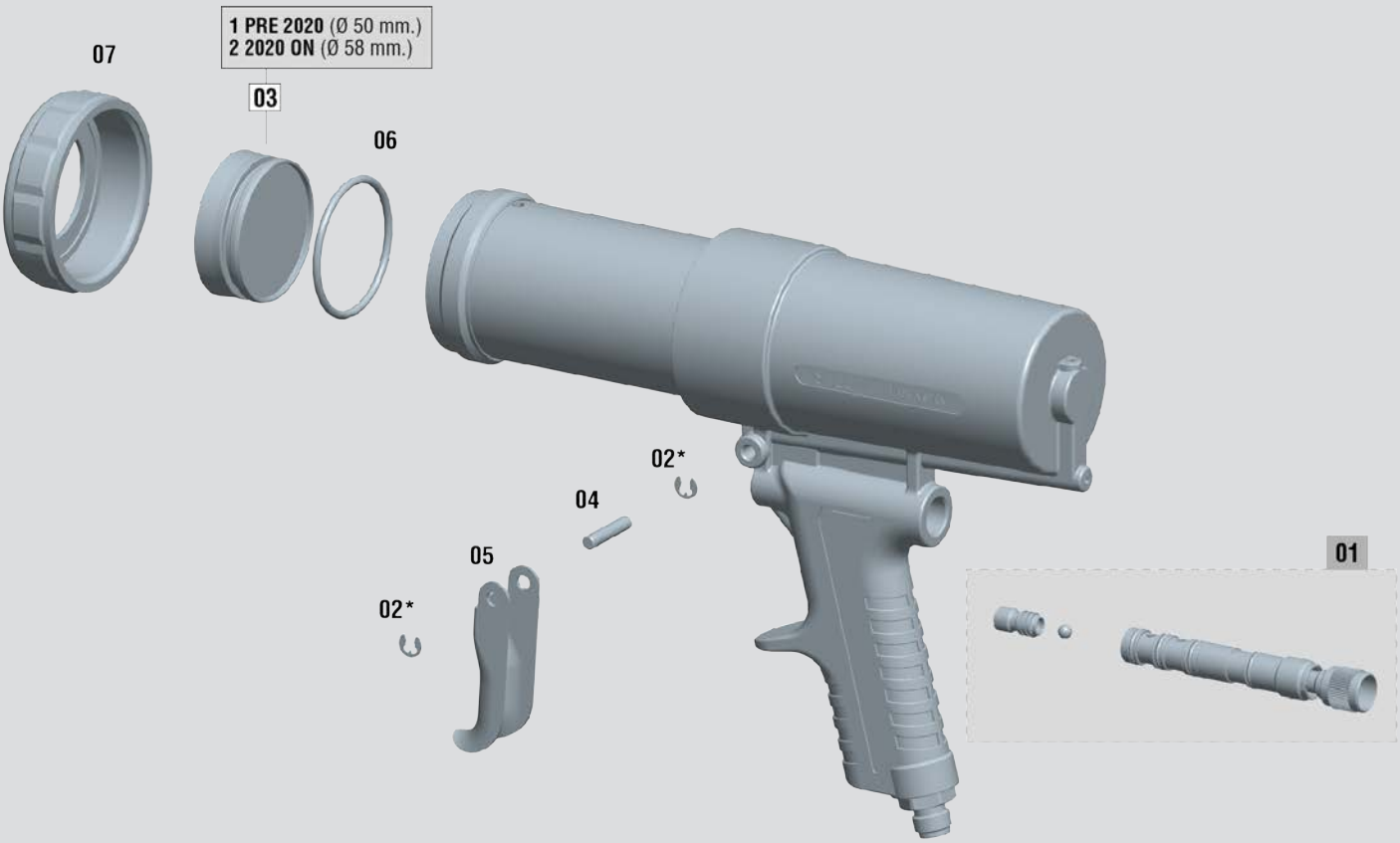

SPARE PARTS — **Sagola 3900 PLUS M**

No.	Code	Description
01	56417206	Air valve Kit
02	50850604	Washer DIN 6799 RS 4 S. Steel
03/1	52910204	Sausage pushing disc Ø 50 mm.
03/2	52910205	Sausage pushing disc Ø 50.8 mm.
04	53110905	Trigger shaft slotted
05	53910107	Trigger
06	54250999	O-ring 44.20 x 3.00 nitrile
07	57410110	Front cover nut

Latest updated version of the exploded view Sagola 3900 Plus M

This exploded view is not the material list of the gun

518 Pro anti-gravel gun

518 Pro anti-gravel gun

Professional pressurized pneumatic gun for antigravel cartridges and underbody protection.

Total regulation on product flow and quality of atomization and spray size. Air inflow regulator.

Operating pressure. The cartridge container is made in anodized aluminum. It is light and sturdy. Needle regulator to control precisely the texturing. Very accurate depressurizing valve. It is easy to handle even with gloves.

Special air cap for cavity wax, that includes two types of dispensers. (OPTIONAL). Stainless steel silencer.

The 518 Pro works with low pressure and offers the maximum regulation options and productivity.

TECHNICAL DATA

		Sagola 518 PRO
Dimensions	22.8 x 10 x 36.5 cm.	9 x 4 x 14.4”
Weight (empty)	1.38 Kilograms	3.02 lbs
Air consumption	160 L/min. (at 3.5 bar)	5.65 cfm (at 50.7 psi)
Working pressure	2 - 4 bar	29 - 58 psi
Maximum air inlet pressure	10 bar	145 psi
Connections	BSP 1/4” M	

VERSIONS / ACCESSORIES

Description	Code
518 PRO anti-gravel gun	**10330301**
Nozzles Kit + Gun adapter (Optional)	**56418705**
• Rosette nozzle	
• 360° nozzle	

Optional special nozzle for small cavities

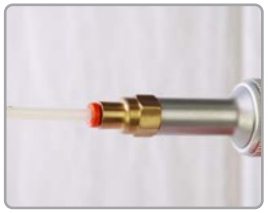

Gun adapter

518 Pro anti-gravel gun

Sagola 518 Pro spare parts

SAGOLA is synonymous with quality and service. For this reason, SAGOLA provides a comprehensive spare parts and service guarantee, ensuring the proper maintenance of all its products, even those sold more than 10 years ago.
To ensure the best possible results and a high-quality finish, the spray gun must be thoroughly cleaned after each use and periodically checked for damaged or worn components. Any damaged or worn parts must be replaced.

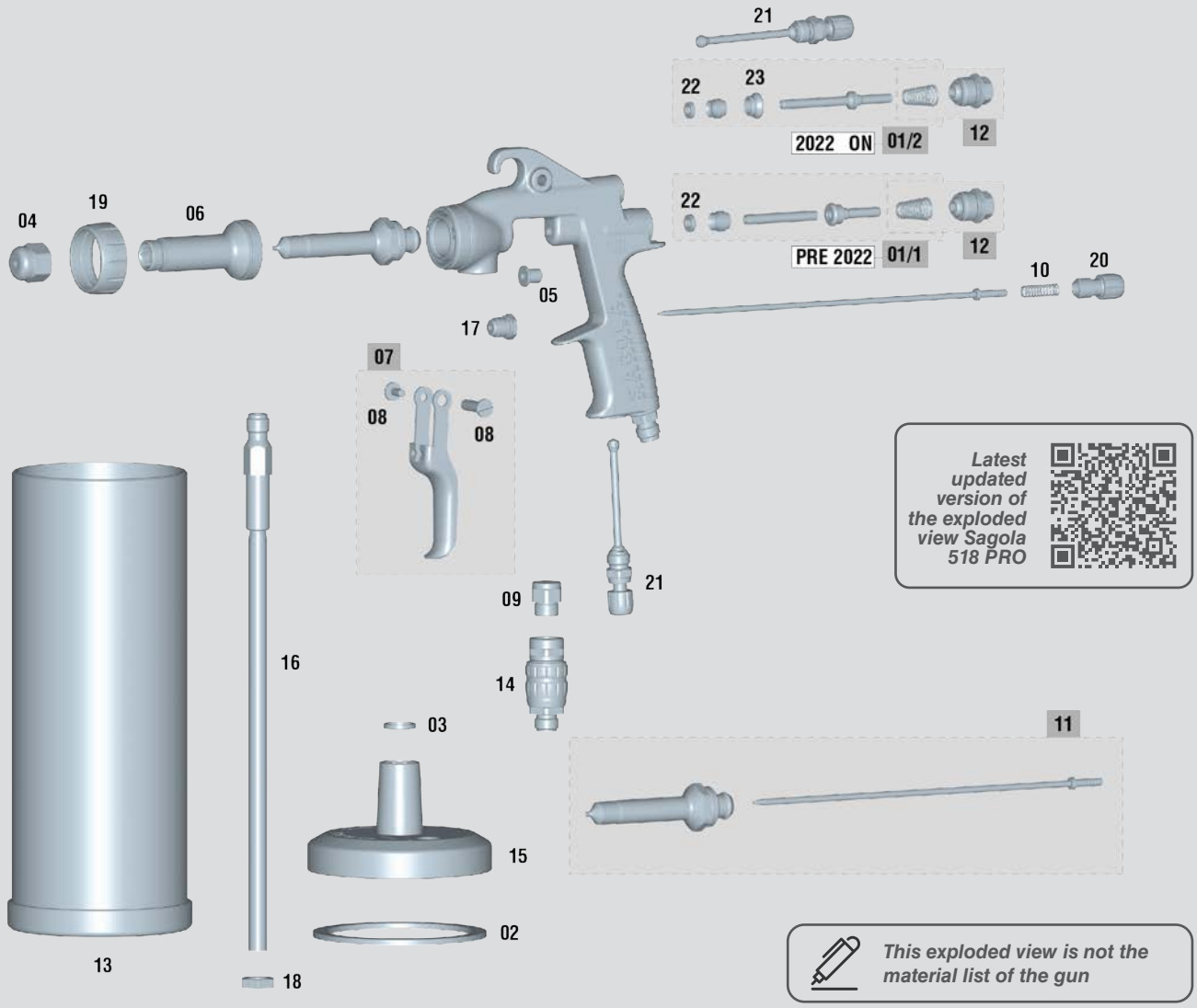

SPARE PARTS — Sagola 518 PRO

No.	Code	Description
01	56418481	Air valve Kit
02	56418703	Deposit closed washer (5 units)
03	50811017	Deposit cover washer
04	51410169	Aircap
05	51910608	Trigger guide bushing
06	52710048	Aircap support body
07	56418637	Trigger Kit
08	56418429	Screw + trigger shaft (short) Kit
09	55751904	Brass silent connection 1/4" BSP
10	56410072	Spring + top
11	10011199	2.00 Nozzle + Needle Kit

SPARE PARTS — Sagola 518 PRO

No.	Code	Description
12	56418701	Guide box + conical spring Kit
13	56412314	Product deposit
14	56418519	Air flow regulator 1/4” x19 M-F
15	56416314	Deposit cover
16	56417009	Suction tube 1/4” x19
17	57212211	Prensaestopas aguja
18	57410304	Nut
19	57410456	Nut lock
20	57810342	Product regulator wheel (black)
21	56415254	Air regulator

416 anti-gravel gun

416 anti-gravel gun

Pneumatic gun for antigravel cartridges and underbody protection. Operation by suction.

Gun for the application of standardized acoustic insulation 1 L. cartridges. To be screwed directly to the cartridge.

Adjustable metallic aircap to control the quantity and texture of the product.

TECHNICAL DATA

		Sagola 416
Dimensions	18.7 x 4.5 x 31.1 cm.	7.4 x 1.8 x 12.2”
Weight (empty)	0.52 Kilograms	1.15 lbs
Air consumption	160 L/min. (at 3.5 bar)	5.65 cfm (at 50.7 psi)
Working pressure	3 - 10 bar	43.5 - 145 psi
Maximum air inlet pressure	10 bar	145 psi
Connections	BSP 1/4” M	

Description	Code
416 anti-gravel gun	**20330401**

Screwed directly to the cartridge

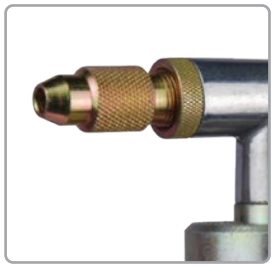

Adjustable metallic aircap

1/4” air inlet

Classic S1 and Classic I Plus

Classic S1 blowguns

Blowgun with body built in aluminum. Light but robust. Air inlet 1/4” male.

Three versions of the blow gun Classic S1:

- Classic S1 with metallic aircap.
- Classic S1 with extension aircap.
- Classic S1 with plastic aircap.

Classic S1 Metallic

Code
20340601

Classic S1 Plastic

Code
20340603

Classic S1 Extension

Code
20340604

Classic S1 Venturi blowguns

Multiply the air flow X4 with the help of the Venturi system offered by this version of the Classic S1. Blowgun with body built in aluminum. Light but robust. Air inlet 1/4” male.

Classic S1 Venturi

Code
20340605

Pocket blower

Small size blower. Pen-type clip. Adjustable flow. Quick disconnect connector.

Pocket blower

Code
40000336

TECHNICAL DATA — Classic S1/Venturi/Blower

		Classic S1		Classic S1 Venturi		Pocket blower	
Dimensions	Metallic	11.7 x 2.5 x 15.3 cm.	4.6 x 1 x 6”	15.8 x 2.7 x 15.3 cm.	6.2 x 1.06 x 6”	113 mm. (close) 116 mm. (open)	4.45” (close) 4.57” (open)
	Plastic	11.7 x 2.5 x 15.3 cm.	4.6 x 1 x 6”				
	Extension	20.6 x 2.5 x 15.3 cm.	8.1 x 1 x 6”				
Weight		190 g. / 187 g. / 198 g. 0.418 lbs / 0.413 lbs / 0.436 lbs		225 g.	0,5 lbs	23 g.	0.05 lbs
Air inlet connection		Connection 1/4” M		Connection 1/4” M		1/4” M US-Mil	
Air consumption (at 6 bar)		240 L/min.	8.5 cfm	240 L/min.	8.5 cfm	450 L/min.	15.9 cfm
Air flow ratio (air outlet)		1:1		4:1 (925 L/min. - 33 cfm)		1:1	
Working pressure		3 - 6 bar	43.5 - 87 psi	3 - 6 bar	43.5 - 87 psi	3 - 6 bar	43.5 - 87 psi
Maximum air inlet pressure		10 bar	145 psi	10 bar	145 psi	10 bar	145 psi

Inflating gun - pressure checker Classic I Plus

Professional inflating gun - pressure checker. Manufactured in aluminum. Maximum robustness and reliability. Shock-protected pressure gauge.

TECHNICAL DATA — Classic I Plus

Dimensions	23.4 x 9.8 x 13 cm.	9.2 x 3.8 x 5.1”
Weight	800 g.	1,76 lbs
Hose length	0.5 m.	19.7”
Working pressure	2 - 10 bar	29 - 145 psi
Maximum air inlet pressure	10 bar	145 psi
Connections	BSP 1/4” M	

Code
10310201

AGOLA

08

Drying systems

Most of the repairs in workshops are small and medium bumps, mainly in the front, rear and side parts.

Traditionally cabin room for drying small areas of the bodywork is used and can cause problems bottleneck in situations of great workflow.

Contrary to booths, infrared dryers demonstrate more effective on small areas of the bodywork as they allow the application of heat directly on the treated part.

Sagola Super Flow

Drying gun with Venturi system

Includes venturi regulator to adapt drying technique to the coated surface, retouched area or entire part.

Achieves far superior performance than any other waterborne paints dryer.

Can be fully dismantled to facilitate cleaning and proper maintenance (avoiding pollution).

Thanks to the Venturi system, reduce drying time with an air outlet flow of 6,000 liters per minute.

Larger volume of air outlet for rapid water evaporation.

Exclusive Venturi Regulator.

REGULATIONS:
2014/34/CE
ATEX Ex II 2G x
2006/42/CE
UNE-EN ISO
80079-36:2017

TECHNICAL DATA

		SUPER FLOW
Dimensions	11.5 x 6.5 x 20 cm.	4.5 x 2.56 x 7.87”
Air inlet connection	BSP 1/4” M	
Air filter	40 mesh (Stainless steel)	
Working pressure	3 - 6 bar	43.5 - 87 psi
Maximum air flow	Up to 6,000 L/min.	Up to 212 cfm
Air consumption	300 - 600 L/min.	10.6 - 21.2 cfm
Application distance	50 - 80 cm.	19.7 - 31.5”
Weight	580 g.	1.28 lbs

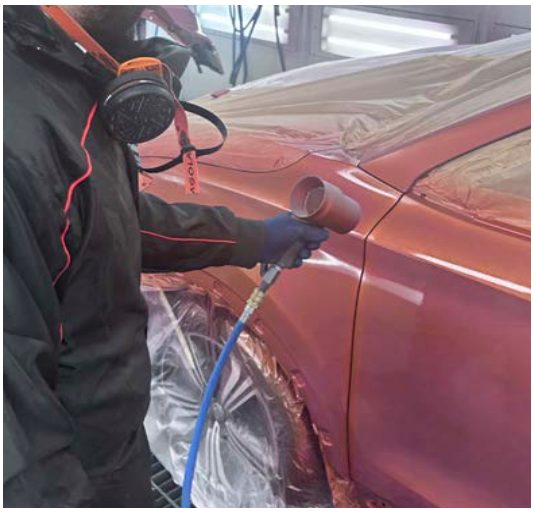

VERSIONS

Description	Code
Super Flow drying gun	**10340401**

Exclusive DISASSEMBLY system for cleaning

1 Step

2 Step

3 Step

4 Step

5 Step

Sagola Classic Venturi

Drying gun with Venturi system

Very light drying gun that facilitates work in the workshop.

High ergonomics for a better adaptation to the hand.

High performance. Special drying gun for waterborne products.

Thanks to the Venturi system, reduce drying time.

Larger volume of air outlet for rapid water evaporation.

Built with valve and air filter.

Multiple adaptability.

REGULATIONS:
2014/34/CE
ATEX Ex II 2G x
2006/42/CE
UNE-EN ISO
80079-36:2017

VERSIONS

Description	Code
Classic Venturi drying gun	40000297
Venturi Classic Stand + 2 Classic Venturi drying guns	40000244

TECHNICAL DATA	VENTURI CLASSIC	
Dimensions	22 x 12 x 8 cm.	8.7 x 4.7 x 3.1”
Air inlet connection	BSP 1/4” M	
Working pressure	3 - 6 bar	43.5 - 87 psi
Maximum air flow	Up to 5,000 L/min.	Up to 176 cfm
Air consumption	300 - 600 L/min.	10.6 - 21.2 cfm
Weight	561 g.	1.24 lbs

Venturi Classic Stand

Support for two drying guns. Three support points to the ground for better stability.

Adjustable height for better access to parts.

2 mobile arms for two drying guns. Horizontally and vertically movable arms.

Light but robust.

Easy installation and assembly.

Code
40000243

TECHNICAL DATA	VENTURI CLASSIC STAND	
Dimensions	60 x 160 cm.	23.6 x 63”
Maximum height	210 cm.	82.7”
Arm length	60 cm.	23.6”
Weight	8 Kg.	17.6 lbs

WÜRTH
WÜRTH
WÜRTH
IAGOLA

09

Personal protection

Protective masks for sanding and painting processes, anti-static painters' overalls...

One of SAGOLA's main concerns is to assure optimum, safe working conditions for all.

Anti-static coverall

Sagola anti-static coverall

Antistatic coveralls of high comfort. Breathable.

Ventilation systems with slots in the back and in the armpits.

Adjustable hood with elastic band and velcro. Press-buttons neck closure. Adjustable feet closure. Large comfortable elastic wrist closures.

2-way zip and flap fitted. Includes 2 chest pockets, 2 side pockets, 1 hip pocket and 1 inside pocket.

Original Dupont Teflon coating (water repellent and dirt-resistant).

Silicone and lint free.

Teflon non-stick coating

Antistatic coverall

TECHNICAL DATA

Composition	98% polyester, 2% carbon
Washing temperature	30°C (86°F) or chemical cleaning
Protection	PPE CAT.I
Antistatic fabric	EN 1149-5:2018
Serigraphy	Black Sagola logo (On the back and pocket of the chest)

Black Sagola anti-static coverall

Antistatic coverall that protects from general dirt that occurs when spraying paints. Prevents contamination of the painted surface by dust and fluff.

Black in color with red decorative stripes. High-quality zipper with rubber puller. Hood with elastic band.

Breathable fabric on the back. Breathable mesh inserts under the arms and in the crotch.

Chest pocket with protective flap and Velcro closure. 2 side pockets for hands with protective strip and velcro closure. Back pocket. Comfortable nylon wristbands and elasticated ankle waistband.

Antistatic coverall

TECHNICAL DATA

Composition	100% polyester
Washing temperature	40°C (104°F) or chemical cleaning
Protection	PPE CAT.I
Antistatic fabric	EN 1149-1:2006
Serigraphy	White Sagola logo (On the back, chest pocket and leg)

VERSIONS

Description	Size	UE size	Code	Code
XS Sagola anti-static coverall	XS	38/40	**40000523**	-
S Sagola anti-static coverall	S	42/44	**40000524**	-
M Sagola anti-static coverall	M	46/48	**40000525**	**40000536**
L Sagola anti-static coverall	L	50/52	**40000526**	**40000537**
XL Sagola anti-static coverall	XL	54/56	**40000527**	**40000538**
XXL Sagola anti-static coverall	XXL	58/60	**40000528**	-
XXXL Sagola anti-static coverall	XXXL	62/64	**40000529**	-

4240 breathing equipment

REGULATIONS:
BS EN 1835
Protection: 40 factor
EC Certificate No. 58459
BSi Product Certificate

Complet breathing equipment

Complete maximum protection breathing equipment that includes: Belt, preset regulator incorporating warning gauge with high efficiency coalescing filter and activated carbon filter to remove low levels of moisture and oil, which absorbs vapor and odour. 10 meters of hose and safety plugs, 1.5 meter of hose spray gun outlet.

High quality breathing equipment that meets BS EN 1835 standards, with a protection factor of 40. EC Certificate nº 58459, issued by BSi Product Certificate.

Regulation: 89/686/CEE (EPI)

Hose kit: 10 m. de ose with safety plug, 1.5 m. of hose spray gun outlet.

TECHNICAL DATA

	4240 BREATHING EQUIPMENT	
Air pressure	4 - 10 bar	58 - 145 psi
Mask air flow	160 - 232 L/min.	5.65 - 8.19 cfm
Hose length	10 m. (supply to regulator)	39.4”
Working temperature range	1.5°C - 50°C	34.7°F - 122°F
Filter	0.01 µm	
Filter life	400 hours	

VERSIONS / ACCESSORIES

Description	Connection	Code
4240 Mask + Hose Kit	US-Mil	**15830101**
4240 Mask + Hose Kit	Nitto	**15830102**
4240 Mask	US-Mil	**15830103**
4240 Mask	Nitto	**15830104**
Visor 10 units	**Spare part**	**15880013**
Charcoal filter	**Spare part**	**15880015**
Acetate screen kit	**Spare part**	**15880011**

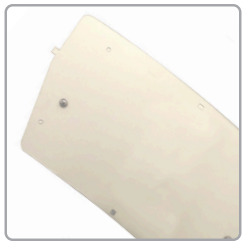

Acetate screen

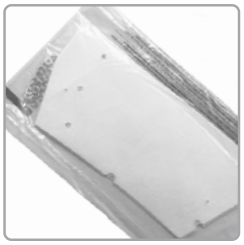

Visor

When used with spraygun, 620 L/min at 6 bar will be required

MP300 breathing mask

MP300 breathing mask

The MP300 mask and A1 filter set has been designed to provide maximum protection against inhalation of organic products with a boiling point over 65°C, without inconveniencing users in any way, enabling them to carry out their work in complete comfort.

The set adapts perfectly to all kinds of expressions and movements, always providing the highest possible level of protection.

The set is made up of a mask and two filters and covers the user's nose, mouth and chin. It is manufactured using light, highly resistant materials that do not have any harmful effects on users' health and hygiene.

The main body of the mask is made from soft natural rubber.

The mask is fitted with an exhaling valve made up of a valve-holder and a membrane, which makes it easier for exhaled air to escape.

It has a comfortable neck strap and head strap that can be easily adjusted to the right length.

REGULATIONS:
EN 140: 1998, EN 143:2000/A1:2006,
EN 14387:2004/A1:2008
Control agency No. 0082

TECHNICAL DATA

MP300 BREATHING MASK

Breathing resistance Flujo sinusoidal 25 x 2 L/min:	Inhalation:	2.00 mbar
	Exhalation:	3.00 mbar
Breathing resistance Continuous flow inhalation	At 30 L/min. (1.06 cfm):	0.50 mbar (0.007 psi)
	At 95 L/min. (3.35 cfm):	1.30 mbar (0.019 psi)
CO_2 Content (dead space)	1.00 %	
Leaks to inside (tightness)	< 5.00 %	

VERSIONS / ACCESSORIES

Description		Code
MP300 Mask		**14810301**
Filter 10 units	**Spare part**	**56418052**

Filter spare parts

FFP2 mask

REGULATIONS:
UNE-EN 149:2001 + A1:2009 (FFP2)
Directive EPI UE 2016/425

M200/M210 mask
FFP2 Protection

M200 and M210 self-filtering paper masks with FFP2 level protection. These masks are designed for protection against solid and liquid particles of low and medium toxicity.

Suitable for use against non-ferrous metal dust, metal welding fumes, gases and mists of different materials such as lead, aluminum and manganese.

The mask body contains a flexible metal bar for a perfect fit in the nose area.

Adjustment to the head by double elastic band.

The M210 mask incorporates an exhalation valve to make breathing easier.

VERSIONS

Description	Units/Box	Code
M200 Mask	20	**40000263**
M210 Mask (with valve)	10	**40000264**

Sanding

Painting

The mask can be used in pollution concentrations up to 10 times the Occupational Exposure Limit (OEL).

Spray Gun
Locker
www.sagola.com
SAGOLA
190 MICRON
SAGOLA
SAGOLA
SAGOLA
SAGOLA

10

Accessories and workshop complements

Essential ancillary items for your Bodyshop and spray booth.

Sagola has you covered with our extensive range of paint preparation, masking and general housekeeping products.

Sagola DPC

SAGOLA DPC™

DISPOSABLE PAINT CUP SYSTEM

The Sagola DPC™ Disposable Paint Cup System by Sagola offers a cost effective, time saving, quick colour change solution for today's busy spray shop professionals.

Tough Plastic ABS Cup
with integrated measuring guides. Available in a range of volumes from 100ml - 800ml (3.38 - 27 fl oz).

Disposable Liner
recyclable and designed to collapse evenly.

Domed Lid & Filter
integrated, full diameter filter for consistent paint flow.

Screw Collar
with integrated cup seal.

Adaptor
with enhanced twist lock connector. Compatible with all Sagola spray guns.

Cup Seal Plug
for storing paint whilst not in use.

Sagola DPC

Easy to Clean

Compared to traditional gravity cups the Sagola DPC™ System significantly reduces cleaning time and solvent use.

Easy to Use

On cup ratios and fill markings reduce the reliance on traditional mixing cups, just fill, mix and spray!

Easy to Store

To store unused paint between coats simply fit the Cup Seal Plug and store upside down to keep the filter wet.

Easy to Change

With a range of adaptors to fit Sagola Gravity Spray Guns as well as other manufacturers' guns, starting to use Sagola DPC™ System couldn't be easier.

DPC™ Technical Data/ Versions

CUP	LID	LINER	COLLAR	PLUG	Code DPC™
100 ml.	125 µm	100 ml.			52850101
	190 µm	100 ml.			52850102
200 ml.	125 µm	200 ml.			52850103
	190 µm	200 ml.			52850104
400 ml.	125 µm	400 ml.			52850105
	190 µm	400 ml.			52850106
600 ml.	125 µm	600 ml.			52850107
	190 µm	600 ml.			52850108
800 ml.	125 µm	800 ml.			52850109
	190 µm	800 ml.			52850110
1 Pc.	50 Pcs.	50 Pcs.	1 Pc.	20 Pcs.	<< UNITS

ADAPTERS

for Sagola spray guns and other guns on the market.

4600 DFT / HEX	3300 / 4100 3400 / Mini Pro XD	Classic Lux	IWATA	SATA	DEVILBISS

Check with the gun manufacturer for the thread type for different models.

Paint preparation

Paper paint-strainers

Paper paint-strainers for fast and perfect filtering of the paint.

Paper paint-strainers with 125 or 190 microns Nylon mesh.

To obtain a quick filtering and a surface without speckles.

Supplied in plastic bag to keep them always clean.

VERSIONS

Description	Application	Code
190 µm p. p. strainers	Clearcoats / single stage	**40000253**
125 µm p. p. strainers	Waterborne paints	**40000254**

Mixing cups and lids

Cups with legs to prevent spillage. Reinforced top edge. Made of polypropylene. High resistance.

VERSIONS

Description	Units/Box	Code
400 ml. mixing cup	200	**40000508**
650 ml. mixing cup	200	**40000509**
1,300 ml. mixing cup	200	**40000510**
2,300 ml. mixing cup	175	**40000511**

VERSIONS

Description	Units/Box	Code
400 ml. cup lid	100	**40000512**
650 ml. cup lid	100	**40000513**
1,300 ml. cup lid	100	**40000514**
2,300 ml. cup lid	100	**40000515**

Mixing cup dispenser

VERSIONS

Description	Code
400 ml. mixing cup	**40000517**
650 ml. mixing cup	**40000518**
1,300 ml. mixing cup	**40000519**
2,300 ml. mixing cup	**40000520**

Product mixers

Product mixers of 20 and 30 cm. of length.

VERSIONS

Description	Units/Box	Code
20 x 2 cm. product mixer	500	**40000499**
30 x 2 cm. product mixer	200	**40000320**

Particle removal kit

It is used to remove any particles of dust or dirt that may fall on the fresh paint .

Code
40000249

Booth anti-dust. 10 liters

Product for protecting the walls, screens and glass of a spray booth.

- Protects from spray and dust.
- Application with spray gun, roller or brush.
- Transparent and self adhesive layer.
- Clean product.
- Easily removable with water.

Code
40000023

SagolaSPRAY™

Accelerate and improve your spray gun training skills virtually, whether in the classroom, at work, or at home, using SagolaSPRAY™. Elcometer's VR technology is designed to teach and practice the four basic aspects of spray gun control—distance, angle, consistent speed, and spray overlap—without wasting valuable paint booth time and with minimal hardware.

Learn

SagolaSPRAY™ teaches painting techniques that can be practiced as many times as needed.

Save

Learning in a VR environment is environmentally friendly, saving paint, materials, and time.

Improve

Get instant feedback and learn from your mistakes; simply complete the activity and repeat it!

DISTANCE

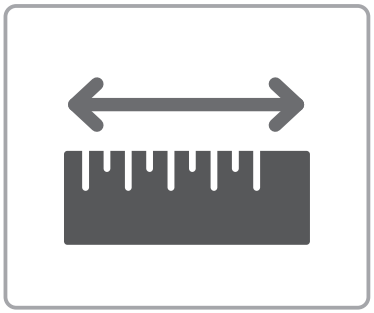

Learn how to hold the gun at the correct distance to ensure a perfect finish.

FAN PATTERN

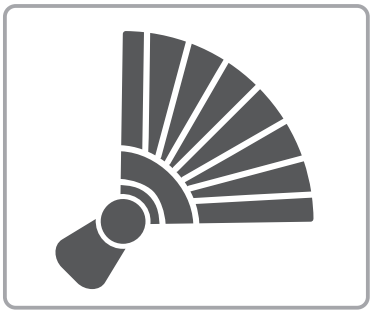

Learn how to adjust your hand position to achieve the correct spray angle.

SPEED

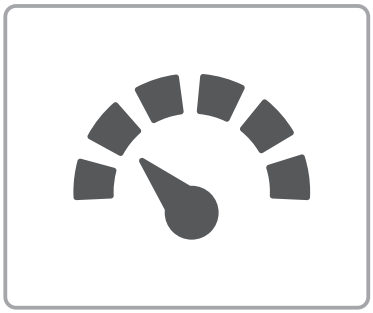

Learn about the speed of the airbrush gun and how to move around with it.

SagolaSPRAY™

SagolaSPRAY™ is a virtual reality spray painting training program. It has been developed by professionals to give the painters of the future a hands-on painting experience without getting their hands dirty.

Who is SagolaSPRAY™ for?

Students, apprentices, teachers, schools, training centers, and automotive and industrial painting professionals can all benefit.

What does SagolaSPRAY™ do?

It facilitates the correct application of painting techniques in aspects such as distance, speed, and angle of application.

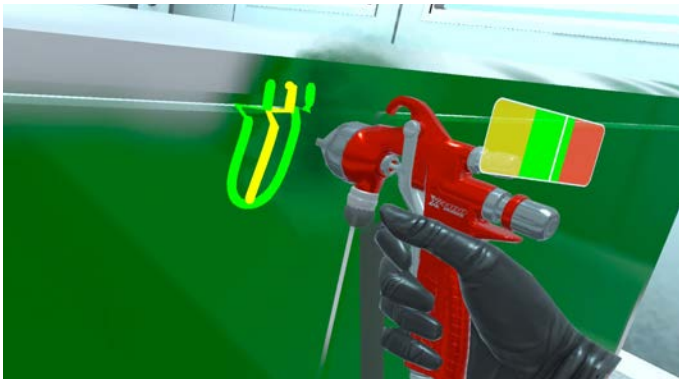

How does SagolaSPRAY™ work?

Both the booth environment and objects are displayed at real size, meaning the user will perform the same movements both inside and outside the virtual reality. This will help them create a routine of movements that will be applied in the real world.

Why choose SagolaSPRAY™?

Practicing in virtual reality environments offers sustainable learning due to savings in paint, materials, and time; as well as an opportunity to immediately correct mistakes.

SAGOLA HEX 4600

SAGOLA®
an Elcometer company

AIM FOR THE BEST

When the result is a matter of microns, choices make the difference.

Every detail, even the smallest, matters.

In Sagola, we know it very well, and our history of technological differentiation, reliability and victories proves it.

We have always supported painters to improve their performance, increase their self-confidence in order to achieve Record goals.

We take care of every single detail, and the result is a superior and consistant performance, but also a perfect aesthetic appearance, where nothing is left to chance, to always stand out.

EXCELLENCE IS A CHOICE.

Sagola

Made in Spain.

SAGOLA®
an Elcometer company

SAGOLA S.A.U.
Urartea, 6 · 01010
Vitoria-Gasteiz (Álava) SPAIN
Tel.: (+34) 945 214 150
sagola@sagola.com
www.sagola.com

Edición EN 05/2026 - 70110102