SAGOLA®
an Elcometer company

2026/27
INDUSTRIAL PAINTING
PROFESSIONAL EQUIPMENT

For more than **70 years** we have worked hard to be the best at what we do, so you can be the best at what you do.

Since 1955

SAGOLA can trace its origins to the year 1955 and is fruit of the pioneering spirit of its founder, **Alejandro Sánchez Larrauri**.

It began as a small subcontracting workshop for industry. After some years in the subcontracting sector, Larrauri felt the need to manufacture his own product and progressively withdrew from subcontracted activity.

International expansion

Due once again to the entrepreneurial spirit of the SAGOLA team, the need was felt to open the company to the international market. For that reason the Company began operating in related markets such as Latin America, where it soon became the indisputable leader, later expanding to Arab countries, Asia and finally Europe. Today, SAGOLA is present in more than 80 countries worldwide.

SAGOLA has maintained the highest quality standards in the manufacture of its products from its very beginnings, which has contributed to becoming a very important competitor in sectors such as bodyshop and industry.

Elcometer Group

In 2020, SAGOLA has became part of a much larger business group. The ELCOMETER Group. Headquartered in the UK, Elcometer is also a family business and has been owned by the Sellars family for seven generations. Beginning in the 19th century as a chemical company, Elcometer, headquartered in Manchester, UK, has grown into one of the world's leaders in the design, manufacture and supply of equipment for the coating and non-destructive testing industries (END).

Elcometer exports more than 90% of the products it manufactures through its offices in France, Germany, Japan, the Netherlands, Singapore, the United Arab Emirates and the USA and its global distribution network that covers more than 170 countries throughout the world.

Like Sagola, the philosophy of the Elcometer company is to integrate quality into all aspects of the products they design and manufacture, while being very aware of the environment that surrounds us. Elcometer's commitment is reflected in its ISO 9001 and 14001 Quality and Environmental accreditations.

Evolution and Innovation

Since our beginnings, SAGOLA has always maintained the highest quality standards in its products and production processes, facilitating the most demanding coating processes.

All of this has made SAGOLA what it is today, a company and a brand recognised not only in the domestic market, but in more than 80 countries worldwide.

We have more than 70 years of experience as manufacturers of spray guns and spraying equipment

After more than 70 years making and developing new products, we are convinced of the need to establish a close relation with our clients on a day-to-day basis.

We know that the best product is based on the proper development of what is demanded by the market at each moment in time. For that reason we constantly reinforce our training and sales and marketing personnel, which is in permanent contact with the market and its needs all over the world.

The quality of our products is acknowledged in more than eighty countries. SAGOLA has a vast experience and owns know-how in the manufacture of professional coating systems.

Human resources

SAGOLA is a worldwide benchmark brand thanks to the highly qualified professionals in our team. Notwithstanding, this team continues to work towards the objective of consolidating the SAGOLA brand as the industry yardstick.

Strengthening our human resources is SAGOLA's principal objective

Since its inception, SAGOLA has been characterized by merging manufacturing technologies, production means and manufacturing processes with a highly qualified human team.

The **high technical level** of our production guarantees the **high quality** of our products.

Research and Development

Our commitment to R+D is absolutely clear. We devote all our efforts in this department to assuring that our products are adapted to the needs of the market.

Our objective is that between both parties and the innovations generated at our headquarters, clients will regard SAGOLA as a safe bet and stay loyal to a brand which researches on a day-to-day basis to develop products which answer their needs.

Optimisation and Self-improvement

When it comes to service we are talking about a deeply rooted culture arising from the history of SAGOLA, to which service is vital.

The robotic automation of all our warehouses is an example, a major investment which gives us and advantage over the competition when it comes to offering a fast, reliable response which the market appreciates.

The quality as a brand

If the SAGOLA brand plays an important role on the market after more than 70 years of history, this is due to the emphasis placed on QUALITY.

At our factory in Vitoria (Spain), each department you visit is steeped in an atmosphere of quality.

At the beginning the founder, Alejandro Sánchez, was able to transmit this vital concept and 67 years later his heritage on this point remains as vital as on the first day.

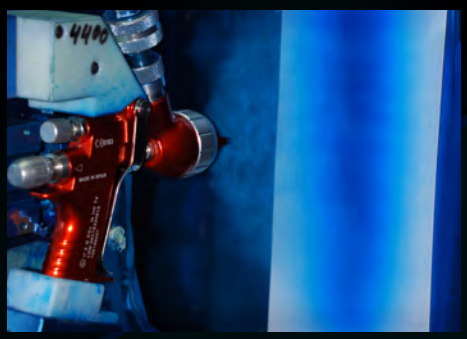

Warranty

SAGOLA provides a 3-year guarantee with the main products.

We know this is the best way of showing our customers that we believe in our products and that our guarantee will make our past and present customers loyal in the future.

From its very beginnings SAGOLA has showed marked interest in advances related to care of and **respect** for the **environment**.

Environment

Since the very first developments regarding VOC emissions to the atmosphere, SAGOLA wanted to be a cutting-edge company by implementing new environmental regulations and systems for its products.

With the inclusion of EPA and HVLP systems, as well as progress made in the field of filtration and others, we believe that we can contribute on a daily basis through new developments in our innovation policy.

Our commercial office and training team are amongst the pillars of the SAGOLA BRAND worldwide

Our training team and the entire company believes that there is an important difference between being merely a quality manufacturer and being a manufacturer which develops and trains workgroups for the various sectors in which we are present.

Sales and Marketing

We believe that the products we make always need a solid sales support. Our commercial partners all over the world appreciate our assistance in setting up their sales networks and technical teams.

Thanks to the efforts of both, we embark upon each new financial year resting on a solid base suitable for the construction of a long-term project. Courses are available both at our Vitoria headquarters and on site.

Customer service

This department is aware that our sales effort requires its support when responding to particular dilemmas, problems or needs related to specific queries we are constantly receiving from all over the world. These are transmitted rapidly to qualified experts who provide immediate data and solutions.

The sectors in which we have traditionally had a presence have always considered us a leading brand, but to stay that way all the players in each sector demand that our developments take account of the changes taking place in each field. We therefore have different product lines for each segment in accordance with its needs.

Bodyshop

This is the sector most often identified with SAGOLA, and in many ways the sector which sets the standard for all the others as far as paints and performance are concerned.

Apart from our list of annexes, for this sector we detail our star products in quality and sales volume.

Industrial Vehicle

This sector recognises in SAGOLA an established manufacturer of coating spray guns and equipment. The brand is closely associated with reliability, quality and convenience at work, contributing confidence to the comercial vehicle distribution network.

Industrial Supplies

This is a constantly developing sector in which SAGOLA has always been the reference, with special finishes equipment for pressure and special pumps for products specifically developed for this sector.

Dedicated to continuous improvement in **quality**, **service** and **management**.

Our business partners are aware that SAGOLA, as well as contributing a quality brand, provides them with a manufacturer who has won their loyalty by dint of constant effort over the years. This is something we strive for every day.

We are aware that our development and innovation will be our best allies along with the loyalty of our users in the future.

SAGOLA has always been export-oriented and has achieved a notable expansion

We have always had an export-oriented attitude. We are currently present in more than 80 countries and keep on growing to ensure that our brand, and the products it represents, reach the entire world with the invaluable help and support of our importers.

The **loyalty** of our users is one of our closest allies, in conjunction with **innovation**.

All **painting guides** are available on our website.

Approved Manufacturers

Our relationship with painting manufacturers around the world means that launching SAGOLA in a new market is easier for us.

Our homologations make the market more active because users know that the product they are buying has been tested and homologated by their paint brand.

For many years, SAGOLA has devoted all its efforts not only on improving the quality of its products and service, but also to improve all aspects related with management, HR, environment, etc.

More than 60 industrial patents/models registered worldwide CEE / UK / ASIA/ USA:

- Manual Spray Guns
- Automatic Spray Guns
- Packing Nuts
- Blow Guns
- Air Caps
- Valves
- Deposits
- Keys, Accessories

As a reference it is worth noting that SAGOLA was one of the first companies in Spain to obtain ISO certification, which meant a new management model where improvisation was forgotten and gave way to a management organization fully controlled and automated.

In 2023, Sagola received Nadcap® accreditation for demonstrating their ongoing commitment to quality by satisfying customer requirements and industry specifications.

The commitment to the environment by SAGOLA has always been one of its main objectives. This is the reason why SAGOLA has been a pioneer in the manufacture of equipment for low-emission paint solvent to the atmosphere. We were pioneers in meeting environmental regulations as strict as the 1151 of the US California State SCAQMD.

On the other hand the commitment to uphold the highest standards of security makes the manufacture of our products to evolution continuously in its design and manufacturing process. Therefore our standard products meet CE, ATEX, IP54, etc.

SAGOLA is a company which spends significant resources in R&D and is always in constant evolution. As a result of this investigation and due to the need of protection of our own Know-how, SAGOLA is very active in all related with the intellectual property, being owner of a large number of patents worldwide.

Undoubtedly, SAGOLA is a recognized brand worldwide so in this aspect, the protection levels of our brand worldwide are very high.

SAGOLA has got registered its different brands (SAGOLA, DEFYNIK and DELON) practically worldwide.

SAGOLA®
an Elcometer company

Our History

1955
SAGOLA foundation as a subcontracting company

1960
SAGOLA begins manufacturing spray guns. Launches the Sagola ALM 401

1966
Expansion of SAGOLA facilities

1973
Due to its growth, SAGOLA builds the new facilities

1980
Sagola is a leader in Spain, Arab countries and Latin America

1990
Sagola launches its low-emission solvent products on the market. One of the top three manufacturers worldwide

1999
Sagola launches the 4200 G spray gun

2007
Sagola launches its first interchangeable HVLP air nozzle

2010
Sagola exports to more than 80 countries

2016
Investment in the latest technology and automation of its manufacturing processes. Sagola launches the 4600 Xtreme spray gun

2020
Sagola is part of the Elcometer Group

2022
Sagola launches the new innovation of the 4100 range spray gun.

2024
Launch of the Dynamic Flow Technology™ system.

2026
HEX System™, the innovative and revolutionary painting technology.

Product Index

1 Airbrushing system 15

page 16 Pressure sprayguns - Low pressure
page 25 Painting Equipments - Low Pressure
page 36 Gravity sprayguns
page 52 Suction sprayguns
page 56 Autonomous equipment - Turbines
page 58 Automatic sprayguns
page 70 Accessories

2 Mixed system 79

page 80 Mixed sprayguns
page 84 Mixed Painting Equipments
page 92 Accessories

3 Airless system 95

page 96 Airless sprayguns
page 102 Airless Painting Equipments
page 105 Electric Airless Painting Equipments
page 108 Accessories

4 Product transfer 115

page 116 Transfer equipment
page 119 Recipient Lids
page 121 Pneumatic mixers

5 Air filtering systems 123

page 124 Introduction
page 126 5000X air filters and Air heater
page 136 4000 air filters
page 141 Plus range air filters

6 Compressed air accessory 145

page 146 Hoses
page 152 Connections - Plugs and connectors

7 Various Applications 157

page 158 Sealant guns / Pneumatic undercoating guns
page 162 Blow guns / Oil gun / Adhesives
page 164 Sanders / Polisher

8 Accessories and consumables 167

page 168 Painting coverall
page 169 Breathing masks
page 173 Waste management system (Crushers)
page 174 Consumables / DPC's
page 177 SagolaSPRAY™

9 Application guides 179

page 180 Industrial Sprayguns
page 182 Industrial Pumps

Worldwide Support

ENGLAND, UK
Elcometer Limited
+44 (0)161 371 6000
sales@elcometer.com
www.elcometer.com

NETHERLANDS
Elcometer B.V.
+31 (0)30 259 1818
nl_info@elcometer.com
www.elcometer.nl

FRANCE
Elcometer Sarl
+33 (0)2 38 86 33 44
contact@elcometer.com
www.elcometer.fr

SPAIN
Sagola S.A.U.
+34 945 214 150
sagola@sagola.com
www.sagola.com

GERMANY
Elcometer Instruments GmbH
+49 (0) 7361 528 06 60
de_info@elcometer.com
www.elcometer.de

UNITED ARAB EMIRATES
EL Inspection & Blasting Equipment LLC
+971 4 295 0191
+971 4 280 3526
uae_sales@elcometer.com
www.elcometer.ae

After the incorporation of Sagola to the Elcometer group, its international network of own offices has been increased in a very significant way. Due to this new international network of offices worldwide, the acquisition of all the products manufactured by Sagola for the different business sectors is now much easier. However, Sagola has distributors in more than 80 countries.

JAPAN
Elcometer KK
+81 (0)3 6869 0770
jp_info@elcometer.com
www.elcometer.co.jp

UNITED STATES OF AMERICA
Elcometer Inc
WARREN, MI: +1 248 650 0500
Toll Free: 800 521 0635
inc@elcometer.com
www.elcometer.com

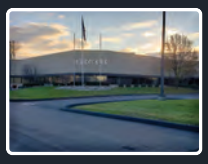

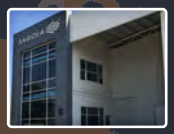

MEXICAN REPUBLIC
Sauritech SA de CV
+52 442 388 5099
ventas@sagolamexico.com.mx
www.sagolamexico.com.mx

REPUBLIC OF SINGAPORE
Elcometer (Asia) Pte Ltd
+65 6462 2822
asia@elcometer.com
www.elcometer.com

We are **here to help...**

sagola@sagola.com
www.sagola.com

AEROGRAPHIC SYSTEM

X 4100 series Pressure — 16

4100 Xtreme Ceramic — 19

4100 Xtreme PD — 19

Mini Xtreme Pressure — 20

6110 Inox — 10 Liters with manual mixer — 31

6110 Inox R — 10 Liters with pneumatic mixer — 32

Sagola 610 — 10 Liters — 33

Sagola 612 — 2,5 Liters — 33

X 4100 series Gravity — 36

3400 Compact — 40

3300 GTO Gravity — 44

475 XTech — 48

X 4100 series Suction — 52

3300 GTO Suction — 54

Turbo 3000 Pro — 58

Turbo 2200 Pro — 59

V 4000 — 60

Mini V — 67

MIXED SYSTEM

X4500 MIX — 80

X3500 MIX — 80

V7 MIX — 83

RAIDER 300X MIX — 86

AIRLESS SYSTEM

PSAM 550 — 96

PSAM 500 — 98

PSAM 104 — 100

PSAA 108 — 101

3300 GTO Pressure

23

DM 1/400

27

DM 1/300

28

652 / 653 Inox

Upper outlet 25/50 Litres
34

Premium 30/60

Lower outlet 30/60 Liters
35

2100 XD

50

Classic PRO XD

50

Classic LUX

52

Quick Index of Sprayguns and Painting equipment

Serie V Corrosives

68

V4098

69

V2 PD

69

MACK 150
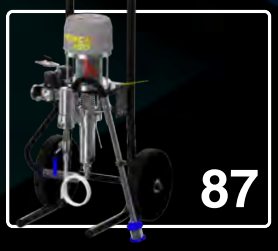
87

MACK 320 MIX

88

HTV 250
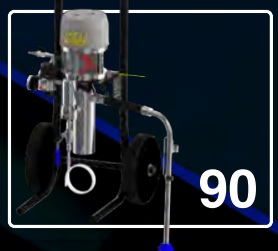
90

HT 10/15/25
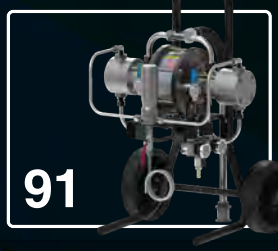
91

RAIDER 300
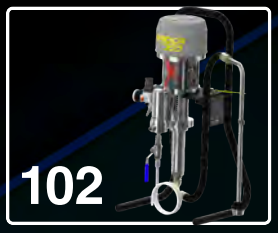
102

MACK 320

103

MACK 400/600

104

ATLANTA

105-107

01

Airbrushing system

Airbrushing is the spraying system that offers the best quality finish. The combination of paint and compressed air minimizes the particle size, resulting in a fine and glossy finish.

It is the predominant system in industries such as automotive, industrial bodywork, or recreational boating, where the quality of the finish is the most important factor.

Sagola's experience in the design and manufacture of airbrushing equipment guarantees the highest application standards required by the latest generation of paints.

Sagola's airbrushing range covers all system variations:

- Manual gravity, suction, and pressure guns.
- Automatic guns.
- Low-pressure painting equipment:

- Diaphragm pumps
- Pressure pots

Sagola X4100 series pressure

X4100 SERIES

The Legend of Industrial finishing

TECHNICAL DATA		Sagola X4100 SERIES
Weight: (X series pressure version)	525 grams	1.16 lbs
Weight: (Xtreme Ceramic version)	552 grams	1.22 lbs
Weight: (Xtreme PD version)	552 grams	1.22 lbs
Dimensions: (X series pressure version)	17.2 x 18.2 cm. (width of handle 1.9 cm.)	6.8 x 7.2 " (width of handle 0.75")
Dimensions: (Xtreme Ceramic version)	19 x 20 cm. (width of handle 1.9 cm.)	7.5 x 7.9 " (width of handle 0.75")
Dimensions: (Xtreme PD version)	19 x 20 cm. (width of handle 1.9 cm.)	7.5 x 7.9 " (width of handle 0.75")
Air inlet connection	BSP 1/4" Male	
Cup	Product input through pressure pot or pneumatic pump	
Product filter	60/100 mesh	
Recommended working pressure	X series: 2 - 3 bar (29 - 43.5 psi)	Xtreme CER/PD: 3 - 4 bar (43.5 - 58 psi)
Average sound pressure level	80 dB	
Materials in contact with the product	Anodized aluminum, chrome-plated aluminum, POM, stainless steel, Teflon, and nylon	

Sagola X4100 series pressure

Spraygun main news

01 Forged and anodized aluminum **BODY.** Great robustness, lightness and high corrosion protection. Register DC 3 300.029

02 NOZZLES AND NEEDLES made of stainless steel. High precision. High flow. Maximum application speed.

03 High durability **AUTOMATIC PRODUCT PACKING GLAND.** One single piece. Stainless steel body in quick-change format. Avoid manipulation and breakage of the glands and facilitates their disassembly for the integral cleaning of the paint area. Unique in the market. Patented system P073000321.5.

04 AIRCAPS. Made of high-strength and lightweight duralumin (corrosion-free). HVLP and EPA systems. Fully interchangeable. 4 choice of aircaps compatible with all available fluid nozzle sizes.

High Transfer HVLP Aircap. Designed under the highest environmental standards. Without pressure reducers in the body of the gun. We convert from a conventional system to an HVLP system, only changing the nozzle.

05 "SOFT FLOW" AIR VALVE. Smooth trigger even at high air pressure levels. No pressure drops between the 1st and 2nd stage of the trigger. Save paint by regulating air pressure with the trigger partially pulled (1st stage).

06 TRIGGER AND AXIS. 100% made of stainless steel. Relocated lever point for more comfortable tightening. Ultra-ergonomic design. Reduces fatigue.

07 AIR INLET REGULATOR. Modern design without sharp edges, it makes easier cleaning. Higher control precision. Ideal for quick adjustment.

08 NEEDLE GUIDE BOX. Reinforced in stainless steel. Very high resistance to mechanical abrasion.

09 PRODUCT REGULATOR. Sensitive adjustment of the amount of material to be applied.

10 FAN REGULATOR. High precision progressive.

11 AIR INLET. 1/4" stainless steel.

12 FILTER HOLDER WITH SWIVEL COUPLING. Facilitates access to difficult areas and reduces fatigue in continued painting sessions.

13 PRODUCT TUBE for hose alignment. Made of stainless steel.

"METAL TO METAL" TECHNOLOGICAL VANGUARD. Very high mechanization technology. The only spraygun on the bodywork market manufactured without any type of gasket, neither inside nor outside, in the closures between the air and the paint. Minimize the number of spare parts.

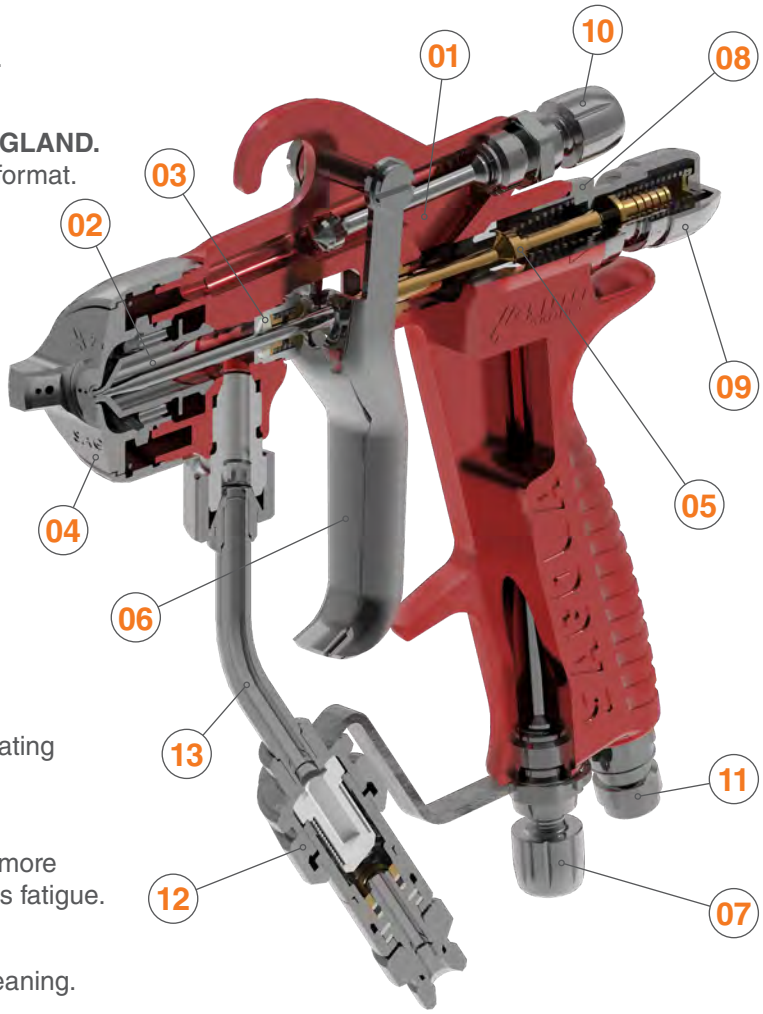

ULTRA SOFT-FLOW VALVE

It reduces trigger pull fatigue by up to 65%.

Code 56418684

Sagola X4100 series pressure

X4100 series aircaps technical data PRESSURE / Versions

XT03/3030 X series Aircap. Our HVLP aircap guarantees a reduction in spray mist which means an increase in transfer. Low pressure spraying provides perfect metal particle alignment.

HVLP PAINTED SYSTEM

Recommended application	Recommended nozzle	Aircap	Air consumption at 2 bar	Recommended pressure	Application distance	Spray gun Code
FINISHES. BASECOATS. DYES	1.00	XT03	460 L/min. (16.24 cfm)	0.5 - 1.0 bar (7 - 14.5 psi)	12 - 15 cm. (4.7 - 5.9")	10152406
GENERAL FINISHES PRIMERS	1.20	XT03	460 L/min. (16.24 cfm)	1,0 - 1.5 bar (14.5 - 22 psi)		10152407
PRIMERS AND BASECOATS	1.40	3030	514 L/min. (18.15 cfm)	2.0 - 2.5 bar (29 - 36 psi)		10152412

XT01 B/Super VIT X series Aircap. Versatility and perfect adaptation to any type of industrial painting project. High gloss finishes, primers and high viscosity paints. Its sustained air consumption, together with the high percentages of product transfer, make SAGOLA's EPA aircaps the most balanced system on the market.

EPA PAINTED SYSTEM

Recommended application	Recommended nozzle	Aircap	Air consumption at 2 bar	Recommended pressure	Application distance	Spray gun Code
METALLICS. CLEARCOATS	1.00	XT01 B	295 L/min. (10.42 cfm)	0.5 - 1.0 bar (7 - 14.5 psi)	18 - 20 cm. (7 - 7.9")	10152408
CLEARCOAT AND FILLERS	1.20	XT01 B	295 L/min. (10.42 cfm)	1.0 - 1.5 bar (14.5 - 22 psi)		10152409
PRIMERS AND FILLERS	1.40	XT01 B	295 L/min. (10.42 cfm)	2.0 - 2.5 bar (29 - 36 psi)		10152410
METALLICS. CLEARCOATS	1.20	Super VIT	380 L/min. (13.42 cfm)	1.0 - 1.5 bar (14.5 - 22 psi)		10152414
CLEARCOAT AND FILLERS	1.40	Super VIT	380 L/min. (13.42 cfm)	2.0 - 2.5 bar (29 - 36 psi)		10152416

777 / 765 X series Aircap. Speed and high energy of atomization. Large surface painting with an exceptional high gloss finish. Available to be combined with high size of nozzles in work with high viscosity products. Maximum speed. Maximum level of gloss.

MEDIUM PRESSURE PAINTED SYSTEM

Recommended application	Recommended nozzle	Aircap	Air consumption at 2 bar	Recommended pressure	Application distance	Spray gun Code
FINISHES. HIGH QUALITY	1.00	777	345 L/min. (12.18 cfm)	0.8 - 1.5 bar (11.6 - 22 psi)	18 - 20 cm. (7 - 7.9")	10152404
FINISHES. HIGH GLOSS	1.20	777	345 L/min. (12.18 cfm)	0.8 - 1.5 bar (11.6 - 22 psi)		10152405
FINISHES AND PRIMERS	1.20	765	315 L/min. (11.12 cfm)	0.5 - 1.0 bar (7 - 14.5 psi)		10152402
PRIMERS AND BASECOATS	1.40	765	315 L/min. (11.12 cfm)	1.0 - 1.5 bar (14.5 - 22 psi)		10152403
GLUES AND ADHESIVES	1.80	20A	430 L/min. (15.2 cfm)	1.0 - 1.5 bar (14.5 - 22 psi)		10152417

Both the **product contribution** and the **fan size** in the pressure guns are directly related to the product pressure set by the user, the product viscosity and the characteristics of the hose. Therefore, a reference value cannot be established.

Sagola 4100 Xtreme Ceramic / PD

Special applications

Sagola 4100 Xtreme Ceramic

A perfect fusion between speed and high transfer with quality finishes of XTREME aerographic systems.

Ideal for high microns jobs and and highly abrasive products.

In the ceramic applications, we provide the maximum resistance. And in vitroceramic, we can achieve the highest degree of refinement and finishing quality.

Recommended application	Recommended nozzle	Aircap	Air consumption at 2 bar	Recommended pressure	Application distance	Spray gun Code
FINISHES HIGH QUALITY	1.40	78	410 L/min. (16.24 cfm)	0.5 - 1.0 bar (7 - 14.5 psi)	18 - 20 cm. (7 - 7.9")	10152130
FINISHES HIGH TRANSFER PRIMERS	1.40	XT03	460 L/min. (16.42 cfm)	1,0 - 1,5 bar (14.5 - 22 psi)	12 - 15 cm. (4.7 - 5.9")	10152131
SPECIAL ABRASIVES PRODUCTS	1.80	67	400 L/min. (13.41 cfm)	2.0 - 2.5 bar (29 - 36 psi)	18 - 20 cm. (7 - 7.9")	10152132
PRIMERS AND FONDS. HIGH THICKNESS	2.20	64	390 L/min. (10.77 cfm)	2.0 - 2.5 bar (29 - 36 psi)	18 - 20 cm. (7 - 7.9")	10152133
PRIMERS AND FONDS. HIGH THICKNESS	2.50	64	390 L/min. (10.77 cfm)	2.0 - 2.5 bar (29 - 36 psi)	18 - 20 cm. (7 - 7,.9")	10152134
FILLERS. HIGH VISCOSITY	2.80	62	340 L/min. (12 cfm)	2.0 - 2.5 bar (29 - 36 psi)	18 - 20 cm. (7 - 7.9")	10152135
HIGH FLOW. CERAMIC PRODUCTS	2.80	63C	450 L/min. (15.89 cfm)	2.0 - 2.5 bar (29 - 36 psi)	18 - 20 cm. (7 - 7.9")	10152136

Sagola 4100 Xtreme PD

Forged and anodized body, providing great strength and protection to corrosion both externally and internally.

Ideal for marking paints, road markings, primers, high thickness, waterproofing, intumescent, soil protection, generally dense products,...

PD1
Aircap

VERSIONS

Description	Code
4100 Xtreme PD 6.0 [PD1] pressure spraygun	10152301
Full painting equipment: Includes 4100 Xtreme PD 6.0 [PD1] pressure spraygun, Classic 30 pressure pot and air and product hose 10 m. (32.8 ft)	20530705

Sagola Mini Xtreme Pressure

High resistance forged and anodized aluminum body.

Ideal for painting chassis and structures.

Perfect ERGONOMICS: Due to its size it is the perfect spray gun for retricted access areas which require a lot of wrist movement.

mini XTREME

Unlimited possibilities in 347g

Its compact size makes this gun the perfect choice for working in hard to reach areas. Also suitable for spot repair work or lettering. It reduces mist, saves paint and perfectly defines the work zone.

Mini EPA

Mini VIT

Mini HVLP

TECHNICAL DATA

		MINI XTREME PRESSURE
Weight	347 grams	0.77 lbs
Dimensions	15.8 x 16.5 cm. (width of handle 1.8 cm.)	6.22 x 6.5 “ (width of handle 0.71”)
Air inlet connection	BSP 1/4” Male	
Product intlet connection	BSP 3/8” Male	
Deposit	Product input through pressure pot or pneumatic pump	
Recommended working pressure	2 - 3 bar (29 - 43.5 psi)	
Average sound pressure level	80 dB	
Materials in contact with the product	Anodized aluminum, POM, Stainless steel, Teflon and Nylon	

Sagola Mini Xtreme Pressure

Spraygun main news

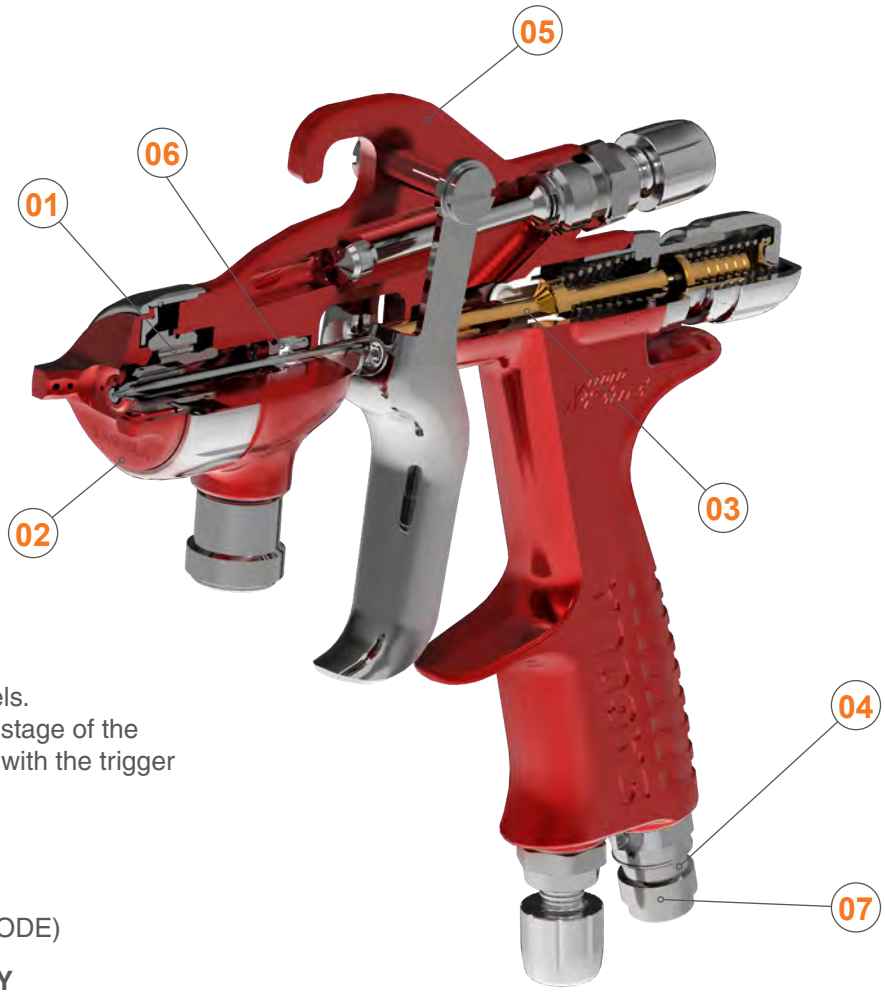

01 DV NOZZLES. Made of stainless steel. Maximum application speed.

02 AIRCAPS Made of duralumin. Highly resistant and light. EPA and HVLP Systems. Totally interchangeable. 3 aircaps to choose. Each compatible with all available fluid nozzle sizes. High transfer HVLP aircap. Designed under the highest environmental standards. Without pressure reducers in the body of the gun We convert from a conventional system to an HVLP system, only changing the aircap. Two high transfer EPA aircaps.

03 "SOFT FLOW" AIR VALVE.
Smooth trigger even at high air pressure levels. No pressure drops between the 1st and 2nd stage of the trigger. Save paint by regulating air pressure with the trigger partially pulled (1st stage).

04 IDENTIFYING RINGS OF COLOURS.
Perfect for differentiation spray guns when there are multiple painters. (COLOR CODE)

05 ANODIZED FORGED ALUMINUM BODY
High strength in just 347 grams.

06 One single piece AUTOMATIC PRODUCT PACKING GLAND.
Made of stainless steel. It avoids manipulation and breakage of the glands and makes easier to remove it for a through cleaning of the paint part.

07 AIR INLET REGULATOR. Modern design without sharp edges, it makes easier cleaning. Higher regulation precision. Ideal for quick adjustment.

"METAL TO METAL" TECHNOLOGY.
The high-end mechanisation technology used makes it the only spray gun in the bodywork market that is manufactured without any kind of gasket, interior or exterior, at the closures between the air and paint. Minimum number of spare parts.

IDENTIFYING RINGS OF COLOURS

ULTRA SOFT-FLOW VALVE

03 It reduces trigger pull fatigue by up to 65%.

Code 56418697

AIR FLOW REGULATOR

The **RC1 pressure regulator** is the perfect ally for the Mini Xtreme spraygun. Hand tighten, no wrench needed. Perfect closing. It is not necessary to teflon the air inlet of the gun (ver pág. 71)

Sagola Mini Xtreme Pressure

Mini Xtreme aircaps technical data / Versions

Mini HVLP Aircap. The use of the Mini HVLP aircap implies a drastic reduction in spray mist and a consequent increase in product transfer. The HVLP aircaps, which work at a lower spray pressure, facilitate the application of metallic colors, obtaining a better alignment of the metallic particle.

SIST. PINTADO HVLP

Recommended application	Nozzle	Aircap	Air consumption at 2 bar	Recommended pressure	Application distance	Spray gun Code
SPECIAL ENAMELS	0.80	Mini HVLP	335 L/min. (11.83 cfm)	2.0 - 3.0 bar (29 - 43.5 psi)	12 - 15 cm. (4.72 - 5.9")	10111901
FINISHES. LOW MIST	1.00	Mini HVLP	335 L/min. (11.83 cfm)	2.0 - 3.0 bar (29 - 43.5 psi)		10111902
FINISHES AND PRIMERS. MAXIMUM SPEED	1.20	Mini HVLP	335 L/min. (11.83 cfm)	2.0 - 3.0 bar (29 - 43.5 psi)		10111903

Mini EPA / Mini VIT Aircap. The EPA aircap of the Sagola Mini Xtreme pressure nozzles are characterized by their versatility and their adaptation to any type of industrial painting project. From high gloss finishes to primers and high viscosity paints. Their sustained air consumption, together with the high percentages of product transfer, make SAGOLA's EPA aircaps the most balanced system on the market.

SIST. PINTADO EPA

Recommended application	Nozzle	Aircap	Air consumption at 2 bar	Recommended pressure	Application distance	Spray gun Code
SHADING. DYES, BASECOATS	0.80	Mini EPA	190 L/min. (6.71 cfm)	2.0 - 3.0 bar (29 - 43.5 psi)	18 - 20 cm. (7 - 7.9")	10111904
FINISHES. HIGH QUALITY	1.00	Mini EPA	190 L/min. (6.71 cfm)	2.0 - 3.0 bar (29 - 43.5 psi)		10111905
FINISHES. HIGH SPEED	1.20	Mini EPA	190 L/min. (6.71 cfm)	2.0 - 3.0 bar (29 - 43.5 psi)		10111906
DYES AND METALLICS	0.80	Mini VIT	375 L/min. (13.24 cfm)	2.0 - 3.0 bar (29 - 43.5 psi)	18 - 20 cm. (7 - 7.9")	10111907
FINISHES. HIGHEST QUALITY	1.00	Mini VIT	375 L/min. (13.24 cfm)	2.0 - 3.0 bar (29 - 43.5 psi)		10111908
PRIMERS, BASECOATS	1.20	Mini VIT	375 L/min. (13.24 cfm)	2.0 - 3.0 bar (29 - 43.5 psi)		10111909

Both the **product contribution** and the **fan size** in the pressure guns are directly related to the product pressure set by the user, the product viscosity and the characteristics of the hose. Therefore, a reference value cannot be established.

Sagola 3300 GTO Pressure

Ideal for painting large surfaces, machinery and industrial vehicles

Continuous working days

Versatility. Industrial finishes

With the 3300 GTO pressure spraygun, SAGOLA offers a very high level product with an excellent quality / price ratio. This suction spraygun is characterized by its versatility.

High performance spraygun. High speed application for painting large surfaces. Offers large fan sizes.

Ideal for the application of enamels, varnishes, primers and basecoats.

High-end aluminum aircaps. Nozzles and needles made of stainless steel.

TECHNICAL DATA	3300 GTO PRESSURE	
Weight	474 grams	1.04 lbs
Dimensions	17.8 x 17.5 cm. (width of handle 1.9 cm.)	7 x 6.9 " (width of handle 0.75")
Air inlet connection	BSP 1/4" Male	
Cup	Product input through pressure pot or pneumatic pump	
Recommended working pressure	2 - 3 bar (29 - 43.5 psi)	
Average sound pressure level	80 dB	
Materials in contact with the product	Anodized aluminum, chromed aluminum, POM, Stainless steel, Teflon and Nylon	

Sagola 3300 GTO Pressure

Spraygun main news

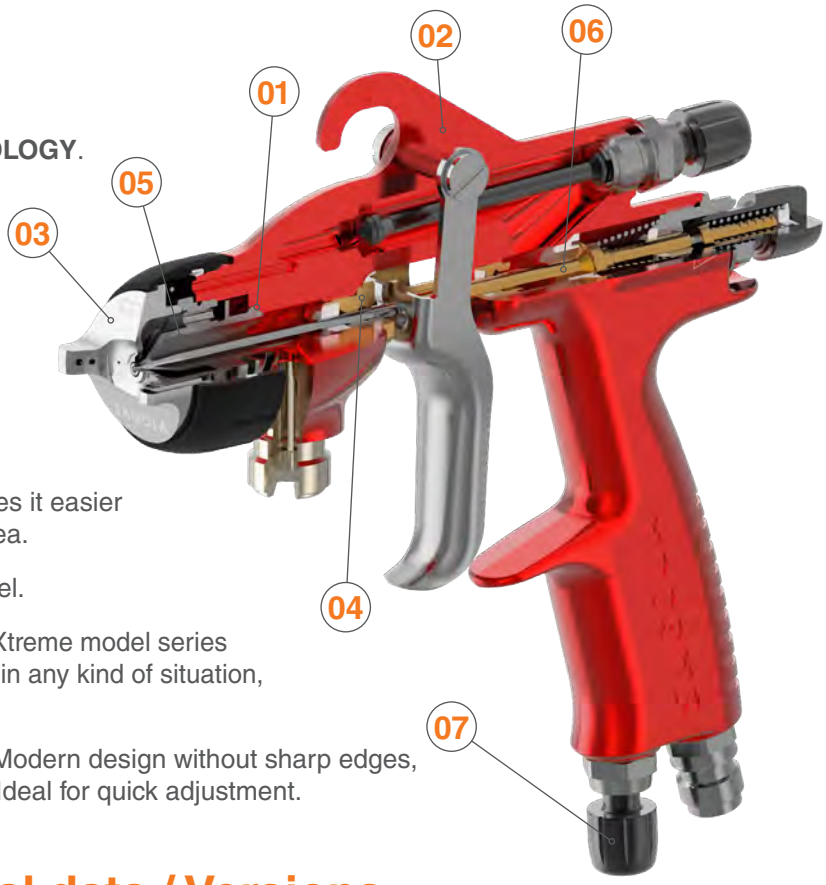

01 SUPER LIGHT. -METAL TO METAL- TECHNOLOGY.
No sealing joints between components.

02 High strength FORGED ALUMINUM BODY.
REGISTER DC 924667-0004
DESIGN REGISTER.

03 ALUMINUM AIRCAPS. 3300 EPA / HVLP
Ultra-fine atomization and larger fans.

04 One single piece AUTOMATIC PAINT PACKING GLAND. Unique in the market. It avoids manipulation and breakage of the glands and makes it easier to remove for the thorough cleaning of the paint area.

05 NOZZLE AND NEEDLE. Made of stainless steel.

06 SINGLE SHAFT SYSTEM. Directly continuing Xtreme model series with a simplified design, synchronized performance in any kind of situation, fewer parts, and maintenance reduction.

07 HIGH PRECISION AIR INLET REGULATOR. Modern design without sharp edges, it makes easier cleaning. Higher control precision. Ideal for quick adjustment.

3300 GTO aircaps technical data / Versions

3300 EPA Aircap. Versatility and perfect adaptation to any type of industrial painting project. High gloss finishes, primers and high viscosity paints.

EPA PAINTED SYSTEM

Recommended application	Nozzle	Aircap	Air consumption at 2 bar	Recommended pressure	Application distance	Spray gun Code
HIGH QUALITY FINISHES	1.00	3300 EPA	250 L/min. (8.8 cfm)	1,5 - 2,0 bar (21.7 - 29 psi)	18 - 20 cm. (7 - 7.9")	10152214
GENERAL FINISHES PRIMERS	1.20	3300 EPA	250 L/min. (8.8 cfm)	1,5 - 2,0 bar (21.7 - 29 psi)		10152215
PRIMERS AND FILLERS	1.40	3300 EPA	250 L/min. (8.8 cfm)	1,5 - 2,0 bar (21.7 - 29 psi)		10152216

GTO HVLP Aircap. Sagola HVLP System. Large fan size. Smooth and uniform finish to save time and consumables in the sanding process. Reduction of spray mist (overspray).

HVLP PAINTED SYSTEM

Recommended application	Nozzle	Aircap	Air consumption at 2 bar	Recommended pressure	Application distance	Spray gun Code
FINISHES. BASECOATS. DYES	1.00	GTO HVLP	360 L/min. (12.71 cfm)	1.8 - 2.0 bar (26,1 - 29 psi)	18 - 20 cm. (7 - 7.9")	10152210
GENERAL FINISHES PRIMERS	1.20	GTO HVLP	360 L/min. (12.71 cfm)	1.8 - 2.0 bar (26,1 - 29 psi)		10152211
PRIMERS AND FILLERS	1.40	GTO HVLP	360 L/min. (12.71 cfm)	1.8 - 2.0 bar (26.1 - 29 psi)		10152212

Low pressure Pumps

High flow. High requirement. Simple handling and low air consumption with high performance.

Elcometer's range of pneumatic double diaphragm pumps are the best choice for those bodywork industries with very demanding jobs.

Free flow rates of up to 40 L/min. offer the possibility of working with several guns at the same time.

Ideal for serial work sessions where production cannot be stopped to refill a can or a tank.

Special versions

Besides the standard versions, we offer two special versions:

Double outlet version: Version with double product outlet for the use of two guns at the same time.

2K paint version: Version with two absorption probes to work with 2K products. (Mix ratio 1:1)

Special version
Double product outlet

Special version
2k Products

Different settings options

Choose the most suitable version for your jobs:

Chassis: Trolley or wall version

Absorption: Absorption hose or 5L gravity tank.

Any type of product

Suitable for waterborne or solvent based products... basecoat, transparent lacquers, primers, fillers,...

Any product with any viscosity or density. Special kit for abrasive products.

Air and product hose set for low pressure equipment.
8 x 15 mm. anti-static air hose and
6 x 8 mm. product hose with Nylon cover.
Light and resistant hose. (see page 147)

Introduction

Double diaphragm pump main news

01 ABSORPTION PROBE.

02 GRAVITY DEPOSIT (OPTIONAL).
Optional version Code 30920402.

03 PRODUCT INLET.

04 PRODUCT OUTLET. 3/8".

05 AIR PRESSURE REGULATOR (Pump).

06 AIR PRESSURE REGULATOR (Gun).

07 ANTI-PULSE FILTER.

08 PRODUCT PRESSURE REGULATOR.

09 PRODUCT RETURN PIPE (Purge).

10 PRESSURE GAUGE (Pump).

11 PRESSURE GAUGE (Gun).

12 AIR INLET TO THE EQUIPMENT.

13 TRANSPORT CARRIAGE.

14 WALL SUPPORT (OPTIONAL).

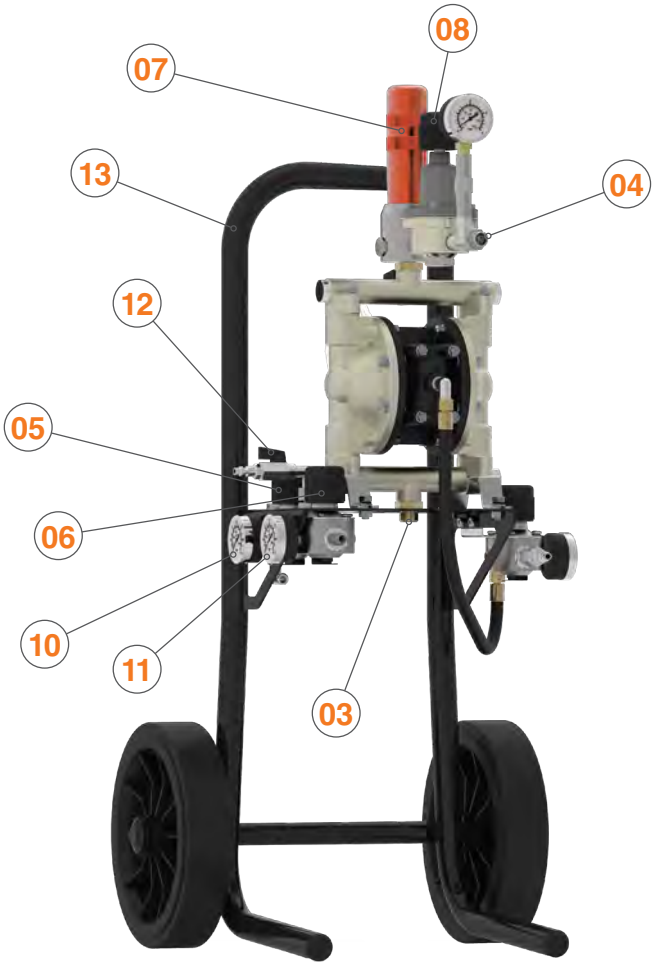

DM 1/400 pumps with lid adaptable to 20 liters barrel

Adaptable lid for standard 20-litre product barrels, with DM 1/400 pump. Product suction by means of absorption probe.

Versions:

- DM 1/400 with lid for 20 L barrel
- DM 1/400 with lid for 20 L barrel and pneumatic mixer.

Sagola DM 1/400

Double membrane pneumatic equipment prepared for high productions. It has the capacity to use several pistols at the same time (double output version).

It offers easy handling and low air consumption with high performance. Minimum cost and maintenance.

With a flow rate of 40 L/min., it is designed to meet the needs of small metal, plastic, wood and industrial bodyshop industries at the highest level.

Valid for products such as lacquers and varnishes, basecoats, dyes, enamels, primers, fillers, glues,..., in general, medium viscosity products.

REGULATIONS:
2006/42/CE, ATEX Ex 2 II GX
UNE-EN-13463-1:2011, UNE-EN ISO 12100:2012, EN 809, EN12621, EN12162 and EN 1127-1

Wall support and Gravity deposit version

Wall support and Absorption probe version

Trolley and Gravity deposit version

TECHNICAL DATA

		DM 1/400
Weight (trolley, absorption and regulator)	18.5 Kilograms	40.8 lbs
Dimensions (trolley, absorption and regulator)	46.5 x 50.1 x 95.2 cm.	18.3 x 19.7 x 37.5 “
Maximum air consumption	580 L/min.	20 cfm
Maximum air inlet pressure	7 bar	102 psi
Free flow	40 L/min.	1.41 cfm
Temperatura máxima operativa	60 °C	140 °F
Air inlet connection	1/4” BSP Female	
Product outlet connection	3/8” BSP Male	

VERSIONS

Description	Code
Trolley and Absorption probe version (standard)	**30920401**
Trolley and Gravity deposit version	**30920402**
Wall support and Absorption probe version	**30920406**
Wall support and Gravity deposit version	**30920407**
DM 1/400 (standard version) **full painting equipment**. Includes X 4100 Series 1.20 [XT01 B] pressure spraygun and and air and product hose 5 m. (16.4 ft)	**30920499**
Abrasive version. Trolley and Absorption probe	**30920403**
Double outlet version. Trolley and Absorption probe	**30920404**
Lid version for 20L barrel	**30990311**
Lid version for 20L barrel with pneumatic remover	**30990310**

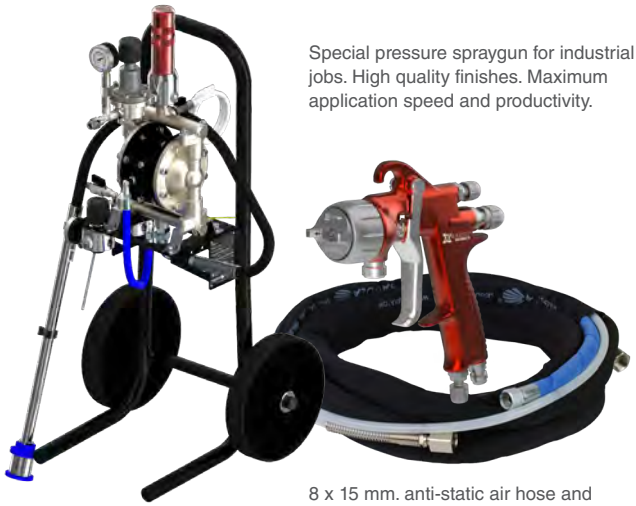

Special pressure spraygun for industrial jobs. High quality finishes. Maximum application speed and productivity.

8 x 15 mm. anti-static air hose and 6 x 8 mm. product hose with Nylon cover. Light and resistant hose.

Sagola DM 1/300

Double diaphragm pneumatic equipment prepared for medium productions.

Easy to use. Reduced cost and maintenance. Very low air consumption.

Flow rate 30 L/min. Designed to meet the needs of small metal, plastic, and wood industries.

Valid for products such as lacquers and varnishes, basecoats, enamels, primers, fillers,..., in general, medium viscosity products.

REGULATIONS:
2006/42/CE
ATEX Ex 2 II GX
UNE-EN-13463-1:2011,
UNE-EN ISO 12100:2012, EN 809,
EN12621, EN12162 and EN 1127-1

DM 1/300 Gravity deposit version

TECHNICAL DATA

		DM 1/300
Weight (trolley, absorption and regulator)	10.5 Kilograms	23,15 lbs
Dimensions (trolley, absorption and regulator)	32.4 X 41.5 X 88.0 cm.	12.76 x 16.35 x 34.65 “
Maximum air consumption (60 cycles/min.)	380 L/min.	13 cfm
Maximum air inlet pressure	6 bar	87 psi
Ø Minimum feed hose	6 mm. - 1/4”	
Free flow (60 cycles/min.)	30 L/min.	1.06 cfm
Air inlet connection	1/4” GAS BSP Female	
Product outlet connection	3/8” GAS BSP Male	

VERSIONS

Description	Code without product regulator	Code with product regulator
Trolley and Absorption probe version (standard)	**30920502**	**30920501**
Trolley and Gravity deposit version	**30920504**	**30920503**
Wall support and Absorption probe version	**30920506**	**30920505**
Wall support and Gravity deposit version	**30920508**	**30920507**
DM 1/300 (standard version) **full painting equipment**. Includes X 4100 Series 1.20 [XT01 B] pressure spraygun and and air and product hose 5 m. (16,4 ft)	-	**30920599**

Special pressure spraygun for industrial jobs. High quality finishes. Maximum application speed and productivity.

8 x 15 mm. anti-static air hose and 6 x 8 mm. product hose with Nylon cover. Light and resistant hose.

Introduction

Pressure Pots

Sagola pressure pots come into their own when pumping equipment demands the maximum durability and minimum maintenance, even with the most abrasive paints (enamels, ceramic and vitro-ceramic clears, cast iron effect, pastes...) or corrosive products (dyes, waterborne paints...).

Suitable for any type of paint

Made of aluminum or stainless steel, Sagola's range of pressure pots is suitable for both waterborne and solvent basecoats, abrasive products, high-viscosity primers or fluid dyes. Check our range, there is an ideal configuration for your product.

Top outlet

Sagola's superior product outlet pressure pots minimize cleaning tasks. Avoid pouring paint into the pressure tank by using one of our interchangeable aluminum tanks or by directly inserting the paint bucket. Simply remove it after painting, and the pressure pot is almost clean.

Maintenance free

An adequate cleaning process is enough to maintain the Sagola pressure pot. There are no wear parts inside so focus on getting a good finish.

High-end features

Double high precision regulators, various mixer options: Manual, pneumatic rotary, pneumatic alternative; discharge valve, high quality materials,... Sagola pressure pots are designed and built following the highest quality standards.

Components for the range of Sagola pressure pots

Air and product hose

8 x 15 mm. Antistatic air hose and 6 x 8 mm. product hose with Nylon cover.
Light and resistant hose.

Version	Code
1.8 m. air hose + product hose + cover	56414130
5 m. air hose + product hose + cover	56414039
7.5 m. air hose + product hose + cover	56414044
10 m. air hose + product hose + cover	56414040
15 m. air hose + product hose + cover	56414041
20 m. air hose + product hose + cover	56414042

Introduction

Sagola's range of **pressure pots** is the best option for large surface projects where a good balance between application speed, finish quality and easy cleaning is required.

Made of stainless steel or aluminum with high-precision regulators, several mixer options (manual, pneumatic...) and superior product outlet; an extremely easy system to clean and maintain.

Versions in 2.5 and 10 liters of capacity. Increase your productivity and save time by not having to refill the gun deposit.

Pressure pots main news

01 TANK OR DEPOSIT made of Stainless Steel or Aluminum.
Very robust and easy to clean.

02 TANK LID made of Stainless Steel or Aluminum.
High quality sealing to prevent leaks.

03 PRODUCT OUTLET VALVE.
Ball valve to open or close the product outlet.

04 MANUAL PRODUCT MIXER.
Mixer for homogenization of the product.

05 AIR INLET.
Air inlet of 1/4" M.

06 SPRAYGUN PRESSURE REGULATOR.
Precise control of gun pressure.

07 POT PRESSURE REGULATOR.
High quality gauge.

08 DISCHARGE VALVE. Pressure release valve.
tared at 4 bar (6110 Inox version) and at 7 bar (6110 Co version)

09 CLAMPS. Very robust clamps for closing the pot.

10 MIXER BLADES. Removables

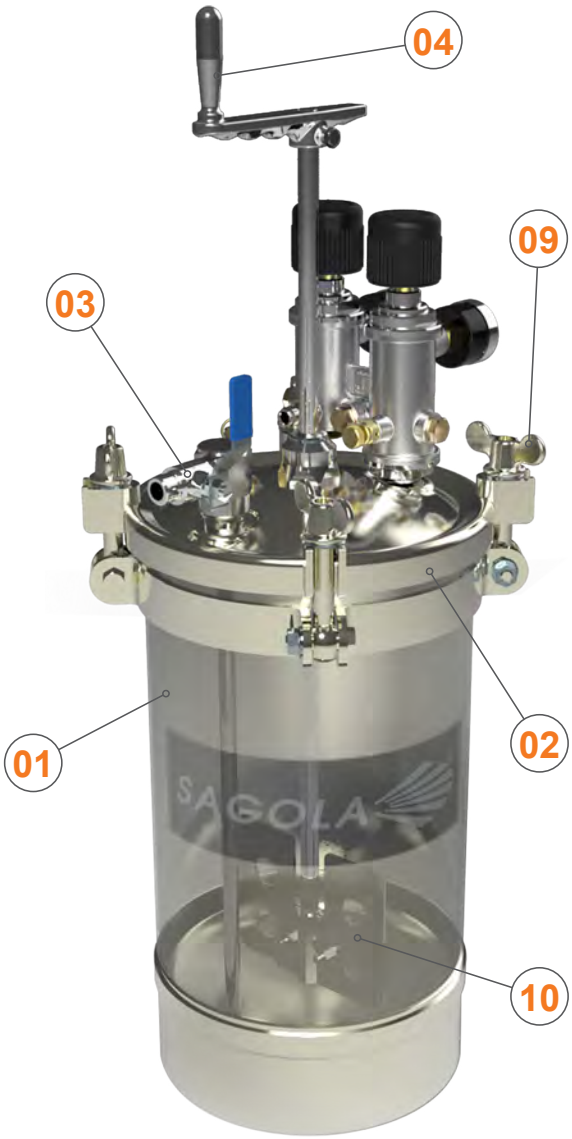

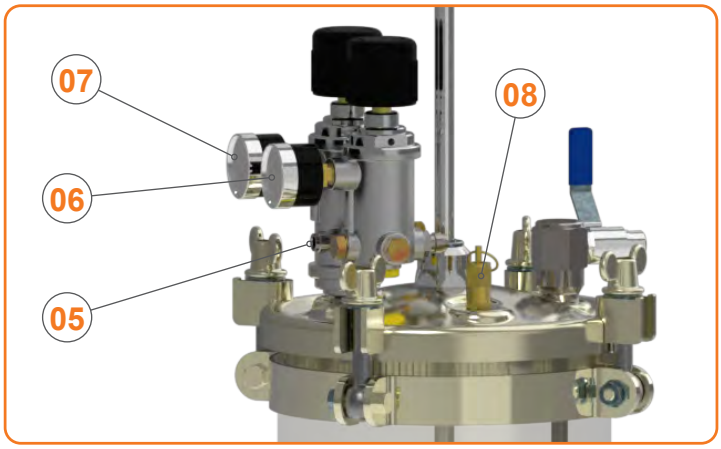

Disposable deposits

Single-use disposable tanks for the 6110 Inox pressure pot.

Sagola 6110 Inox / 6110 Co

The range of SAGOLA pressure pots is characterized by its simple handling and minimal maintenance to provide a great service to professional painting.

Maximum quality of finishes for industrial vehicles painting industries.

The 6110 Inox pressure pot is made of Stainless Steel, being a very robust product.

The tank capacity is 10 liters. Includes manual product mixer or pneumatic mixer. The product outlet is in the upper area of the pot.

Double, high precision, robust regulators with discharge valve.

Valid for waterborne and solvent-based paints. Ideal for Industrial Bodyshop and Nautical Sports.

REGULATIONS:
SPAIN: AP 1070 FBZ 2330
FRANCE: CODAP
GREAT BRITAIN: British standard 1101-1977
GERMANY: A.D. Merkblätter
ATEX Ex II 2G T4 x (Directive 2014/34/UE)

TECHNICAL DATA

	Sagola 6110 INOX		Sagola 6110 Co	
Weight	11.2 Kilograms	24.7 lbs	10 Kilograms	22 lbs
Dimensions (with mixer)	20.8 x 68.3 cm.	8.2 x 26.9 “	20.8 x 68.3 cm.	8.2 x 26.9 “
Tank capacity	10 liters	2.64 US Galon	10 liters	2.64 US Galon
Maximum air inlet pressure	4 bar	58 psi	7 bar	102 psi
Air inlet connection	BSP 1/4” Male		BSP 1/4” Male	
Air outlet connection (Gauge 2)	BSP 1/4” Male		-	
Product outlet connection	BSP 3/8” Male		BSP 3/8” Male	
Air pressure regulator range	0 - 8 bar	0 - 116 psi	-	-
Product pressure regulator range	0 - 4 bar	0 - 58 psi	0 - 8 bar	0 - 116 psi
Materials in contact with the product	Stainless steel, POM, NBR and bronze			

VERSIONS / ACCESSORIES

Description	Code
6110 Inox Pressure Pot (manual mixer)	**10540702**
6110 Co Pressure Pot (dense products, glues)	**10550202**
6110 Inox **Full painting equipment** Includes X 4100 Series 1.20 [XT01 B] pressure spraygun and air and product hose 5 m. (16.4 ft)	**10540799**
Interchangeable tank 10 liters made of stainless steel	52411607
Single-use disposable interchangeable tank. 10 units	52411616

Special pressure spraygun for industrial jobs. High quality finishes. Maximum application speed and productivity.

8 x 15 mm. anti-static air hose and 6 x 8 mm. product hose with Nylon cover. Light and resistant hose.

Sagola 6110 Inox R

New version in the range of 6110 Inox pressure pots.

Easy to use and minimum maintenance.

Maximum quality finishes for industries dedicated to painting industrial vehicles and the nautical industry.

The Sagola 6110 Inox R pressure pot is made of stainless steel, being a very robust product.

The tank capacity is 10 liters. It includes a rotary pneumatic mixer for products that need to be mixed continuously to maintain the homogeneity of the mixture. The product outlet is in the upper area of the tank.

High precision and robust double regulation, with discharge valve.

Valid for water and solvent-based products.

REGULATIONS:
SPAIN: AP 1070 FBZ 2330
FRANCE: CODAP
GREAT BRITAIN: British standard 1101-1977
GERMANY: A.D. Merkblätter
ATEX Ex II 2G T4 x (Directive 2014/34/UE)

TECHNICAL DATA

		Sagola 6110 INOX R
Weight	11.2 Kilograms	24.7 lbs
Dimensions (with mixer)	20.8 x 63 cm.	8.2 x 24.8 “
Tank capacity	10 liters	2.64 US Galon
Maximum air inlet pressure	4 bar	58 psi
Air inlet connection	BSP 1/4” Male	
Air outlet connection (Gauge 2)	BSP 1/4” Male	
Product outlet connection	BSP 3/8” Male	
Air pressure regulator range	0 - 8 bar	0 - 116 psi
Product pressure regulator range	0 - 4 bar	0 - 58 psi
Materials in contact with the product	Stainless steel, POM, NBR and bronze	

VERSIONS / ACCESSORIES

Description	Code
6110 Inox R Pressure Pot (pneumatic mixer)	**10540704**
Sagola 6110 Inox R **Full painting equipment** Includes X 4100 Series 1.20 [XT01 B] pressure spraygun and air and product hose 5 m. (16.4 ft)	**Consult**
Interchangeable tank 10 liters made of stainless steel	52411607
Single-use disposable interchangeable tank. 10 units	52411616

Sagola 610 / Sagola 612

Sagola 610

SAGOLA pressure pot with a 10 liters deposit capacity.

Pot body made of steel and aluminum lid. It incorporates a top handle for holding and transporting.

Includes high-precision double regulation with robust pressure gauges. Pressure discharge valve. Top product output.

Pressure pot valid for the application of medium-low viscosity paints. Valid for solvent based products.

Sagola 612

Small size SAGOLA pressure pot with top handle for easy transport.

Pot body and lid made of aluminum.

Includes pressure regulator with gauge. Pressure discharge valve. Top product output.

Tank capacity is 2.5 liters.

Pressure pot valid for the application of medium-low viscosity paints. Valid for solvent based products.

Sagola 610 REGULATIONS:

2014/68/UE (Sagola 612)
Certificate Module D1 No.: 01 202 TVN/Q-05 0113
ASME Sec. VIII Div. I, 2004 Ed.
ISO 9606-1:2012, ISO 15614-1:2004

TECHNICAL DATA

	Sagola 610		Sagola 612	
Weight	12.6 Kilograms	27.78 lbs	1.8 Kilograms	4.02 lbs
Dimensions (with handle)	25 x 25 x 55 cm.	9.8 x 9.8 x 21.6 “	16.5 x 16.5 x 38.5 cm.	6.5 x 6.5 x 15.16 “
Tank capacity	10 liters	2.64 US Galon	2.5 liters	0.66 US Galon
Maximum air inlet pressure	4 bar	58 psi	3.3 bar	47.8 psi
Air inlet connection	BSP 1/4” Male		BSP 1/4” Male	
Air outlet connection	BSP 1/4” Male (Gauge 2)		BSP 1/4” Male	
Product outlet connection	BSP 3/8” Male		BSP 3/8” Male	
Air pressure regulator range	0 - 6 bar	0 - 87 psi	-	-
Product pressure regulator range	0 - 6 bar	0 - 87 psi	0 - 6 bar	0 - 87 psi
Working temperature range	0 - 50 °C	32 - 122 °F	0 - 50 °C	32 - 122 °F
Materials in contact with the product	Steel, aluminum, POM and Teflon		Anodized aluminium, INOX and NBR	

VERSIONS

Description	Code
Sagola 610 Pressure Pot	**40000273**
Sagola 610 **Full painting equipment** Includes 3300 GTO 1.40 [EPA] pressure spraygun and air and product hose 5 m. (16.4 ft)	**10540798**
Sagola 612 Pressure Pot	**10540801**
Sagola 612 **Full painting equipment** Includes X 4100 Series 1.20 [XT01 B] pressure spraygun and air and product hose 1.8 m. (5.9 ft)	**10540899**

8 x 15 mm. anti-static air hose and
6 x 8 mm. product hose with Nylon cover.
Light and resistant hose.

High performance pressure spray gun with large fan size. High application speed. High transfer aircaps.

Sagola 652/653 Inox

SAGOLA pressure pots with a tank capacity of 25 and 50 liters.

Pot body made of highly resistant and robust stainless steel.

It incorporates side handles for holding and transporting. Wheels for easy transport (optional).

Includes high precision double regulation with robust pressure gauges. Pressure release valve. Superior product output.

Manual, rotary pneumatic or alternative pneumatic mixer.

REGULATIONS:
2014/68/UE, 2014/42/UE
ATEX Ex II 2G T4 x (Directive 2014/34/UE)
UNE EN ISO 80079-36:2017

Smooth paints, glues and highly viscous products

TECHNICAL DATA

	Sagola 652 INOX		Sagola 653 INOX	
Weight (with manual mixer)	38 Kg.	83.7 lbs	45 Kg.	99.2 lbs
Dimensions (with manual mixer)	50.3 x 50.3 x 74.4 cm.	19.8 x 19.8 x 29.3 “	50.3 x 50.3 x 102.8 cm.	19.8 x 19.8 x 40.5 “
Tank capacity	25 liters	6.6 US Galon	50 liters	13.2 US Galon
Máaximum working pressure	4 bar	58 psi	4 bar	58 psi
Air inlet connection	BSP 1/4” Male		BSP 1/4” Male	
Product outlet connection	BSP 3/8” Male/Barb to hose 8 mm.		BSP 3/8” Male/Barb to hose 8 mm.	
Air pressure regulator range	0 - 8 bar	0 - 116 psi	0 - 8 bar	0 - 116 psi
Product pressure regulator range	0 - 4 bar	0 - 58 psi	0 - 4 bar	0 - 58 psi
Working temperature range	0 - 60 °C	32 - 140 °F	0 - 60 °C	32 - 140 °F
Materials in contact with the product	Teflon-coated aluminium, INOX, NBR and bronze			

VERSIONS / ACCESSORIES

Description	Mixer	Wheels	Code
Sagola **652 INOX** Pressure Pot	**manual**	WITHOUT wheels	**10540320**
Sagola **652 INOX** Pressure Pot	**rotary pneumatic**	WITH wheels	**10540321**
Sagola **652 INOX** Pressure Pot	**alternative pneumatic**	WITH wheels	**10540322**
Interchangeable 25 liter tank			**52411608**
Sagola **653 INOX** Pressure Pot	**manual**	WITHOUT wheels	**10540420**
Sagola **653 INOX** Pressure Pot	**rotary pneumatic**	WITH wheels	**10540421**
Sagola **653 INOX** Pressure Pot	**alternative pneumatic**	WITH wheels	**10540422**
Interchangeable 50 liter tank			**52411609**

Interchangeable tanks of 25 and 50 liters for Sagola 652/653 Inox pressure pots

Sagola Premium 30/60

SAGOLA pressure pots with a tank capacity of 30 and 60 liters. Manufactured in stainless steel.

Pots with double lower outlet for product:

- Outlet for dense products BSP 3/4”
- Outlet for smooth products BSP 3/8”

It incorporates side grip handles, wheels and a folding double handlebar for easy transport.

Includes high precision double regulation with robust pressure gauges. Pressure discharge valve.

Application of gotelés, plastic paints and thick products of medium and low viscosity.

REGULATIONS:
2014/68/UE
SPAIN: AP 1070 FBZ 2330
FRANCE: CODAP
GREAT BRITAIN: British standard 1101-1977
GERMANY: A.D. Merkblätter
ATEX Ex II 2G T4 x (Directive 2014/34/UE)
UNE EN-13463-1:2011

TECHNICAL DATA	PREMIUM 30		PREMIUM 60	
Weight	52 Kg.	114.6 lbs	58 Kg.	127.8 lbs
Dimensions	62 x 62 x 85 cm.	24.4 x 24.4 x 33.4 “	88 x 88 x 105 cm.	34.6 x 34.6 x 41.3 “
Tank capacity	30 liters	7.9 US Galon	60 liters	15.9 US Galon
Máaximum working pressure	7 bar	102 psi	7 bar	102 psi
Air inlet connection	BSP 1/4” Male		BSP 1/4” Male	
Product outlet 1 connection	BSP 3/4” Male/Barb to hose 19 mm.			
Product outlet 2 connection	BSP 3/8” Male/Barb to hose 8 mm.			
Air pressure regulator range	0 - 12 bar	0 - 174 psi	0 - 12 bar	0 - 174 psi
Product pressure regulator range	0 - 8 bar	0 - 116 psi	0 - 8 bar	0 - 116 psi
Working temperature range	0 - 50 °C	32 - 122 °F	0 - 50 °C	32 - 122 °F
Materials in contact with the product	INOX, NBR, bronze and brass			

Smooth paints, glues and highly viscous products

Stone, rough and Slurry pastes

VERSIONS / ACCESSORIES

Description	Code
Sagola **Premium 30** Pressure Pot	**20530520**
Sagola **Premium 60** Pressure Pot	**20530620**

Sagola X4100 series gravity

X4100 SERIES

The Legend of Industrial finishing

Ergonomics

Displacement of the center of gravity thanks to the aluminum construction of the aircaps.

Lighter forged aluminum body. Fatigue reduction in series works.

Swivel filter holder in the pressure version.

Hardness

Lower maintenance costs = more productivity thanks to our 'metal to metal' technology: No gaskets or plastic parts in the product area.

TECHNICAL DATA		X4100 SERIES GRAVITY
Weight without cup	496 grams	1.1 lbs
Weight with cup	722.6 grams	1.39 lbs
Dimensions without cup	17.2 x 17.3 cm. (width of handle 1.9 cm.)	6.78 x 6.83 " (width of handle 0.75")
Air inlet connection	BSP 1/4" Male	
Cup	650 ml. capacity (22 fl oz.) Cup with anti-drip system	
Product filter	100 mesh	
Recommended working pressure	2 bar (29 psi)	
Average sound pressure level	80 dB	
Materials in contact with the product	Anodized aluminum, chromed aluminum, POM, Stainless steel, Teflon and Nylon	

Sagola X4100 series gravity

Spraygun main news

01 Forged and anodized aluminum **BODY.** Great robustness, lightness and high corrosion protection. Register DC 3 300.029

02 NOZZLES AND NEEDLES made of stainless steel. High precision. High flow. Maximum application speed.

03 High durability **AUTOMATIC PRODUCT PACKING GLAND**. One single piece. Stainless steel body in quick-change format. Avoid manipulation and breakage of the glands and facilitates their disassembly for the integral cleaning of the paint area. Unique in the market. Patented system P073000321.5.

04 AIRCAPS. Made of high-strength and lightweight duralumin (corrosion-free). HVLP and EPA systems. Fully interchangeable. 4 choice of aircaps compatible with all available fluid nozzle sizes.

High Transfer HVLP Aircap. Designed under the highest environmental standards. Without pressure reducers in the body of the gun.

05 "SOFT FLOW" AIR VALVE. Smooth trigger even at high air pressure levels. No pressure drops between the 1st and 2nd stage of the trigger. Save paint by regulating air pressure with the trigger partially pulled (1st stage).

06 TRIGGER AND AXIS.
100% made of stainless steel. Relocated lever point for more comfortable tightening. Ultra-ergonomic design. Reduces fatigue.

07 AIR INLET REGULATOR.
Modern design without sharp edges, it makes easier cleaning. Higher control precision. Ideal for quick adjustment.

08 NEEDLE GUIDE BOX.
Reinforced in stainless steel.
Very high resistance to mechanical abrasion.

09 PRODUCT REGULATOR. Sensitive adjustment of the amount of material to be applied.

10 FAN REGULATOR. High precision progressive.

11 AIR INLET. 1/4" stainless steel.

12 CUP. High capacity, 650 ml. with anti-drip system.

"METAL TO METAL" TECHNOLOGICAL VANGUARD.
Very high mechanization technology. The only spraygun on the bodywork market manufactured without any type of gasket, neither inside nor outside, in the closures between the air and the paint. Minimize the number of spare parts.

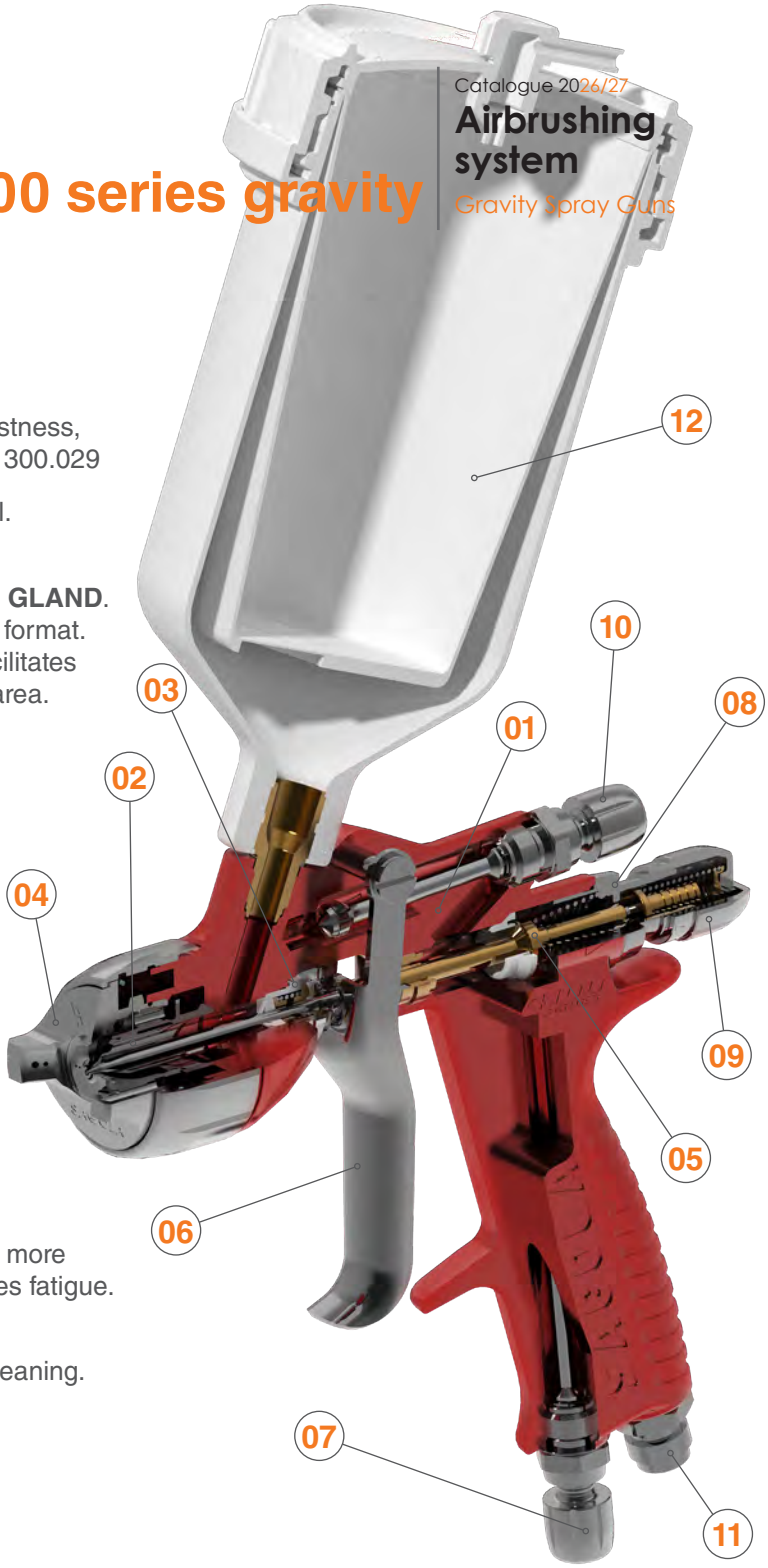

Sagola X4100 series gravity

X4100 series aircaps technical data GRAVITY / Versions

XT01 X series Aircap. Versatility and perfect adaptation to any type of industrial painting project. High gloss finishes, primers and high viscosity paints. Its sustained air consumption, together with the high percentages of product transfer, make SAGOLA's EPA aircaps the most balanced system on the market.

EPA PAINTED SYSTEM

Recommended application	Nozzle	Aircap	Product output flow	Fan size	Application distance	Spray gun Code
FINISHES, BASECOATS	1.30	XT01	171 g/min. (6.03 oz/min.)	250 mm. (9.84")	18 - 20 cm. (7 - 7.9")	10142004
GENERAL FINISHES, CLEARCOATS, SINGLE STAGE	1.40	XT01	175 g/min. (6.17 oz/min.)	255 mm. (10.04")		10142005
PRIMERS	1.60	XT01	209 g/min. (7.37 oz/min.)	285 mm. (11.2")		10142006

Air consumption at 2 bar (29 psi): 235 L/min. (8.30 cfm)

Recommended pressure: 1.8 - 2.2 bar (26 - 32 psi)

Boquilla 96 X series. La boquilla 96 es una leyenda dentro del acabado industrial. Destaca su alta velocidad de aplicación y su calidad de atomización. Es la boquilla de acabados de referencia para nuestra pistola de succión más representativa.

Máxima velocidad. Máximo nivel de brillo.

MEDIUM PRESSURE PAINTED SYSTEM

Recommended application	Nozzle	Aircap	Product output flow	Fan size	Application distance	Spray gun Code
FINISHES, BASECOATS	1.30	96	177 g/min. (6.24 oz/min.)	260 mm. (10.24")	18 - 20 cm. (7 - 7.9")	10142012
GENERAL FINISHES, CLEARCOATS, SINGLE STAGE	1.40	96	178 g/min. (6.28 oz/min.)	270 mm. (10.6")		10142001
PRIMERS AND FILLERS	1.60	96	216 g/min. (7.62 oz/min.)	310 mm. (12.2")		10142002
FILLERS	1.80	96	293 g/min. (10.34 oz/min.)	380 mm. (15")		10142003

Air consumption at 2 bar (29 psi): 250 L/min. (8.83 cfm)

Recommended pressure: 1.8 - 2.2 bar (26 - 32 psi)

Sagola X4100 series gravity

X4100 series aircaps technical data GRAVITY / Versions

XT03 series Aircap. Our HVLP aircap guarantees a reduction in spray mist which means an increase in transfer. Low pressure spraying provides perfect metal particle alignment.

SIST. PINTADO HVLP

Recommended application	Nozzle	Aircap	Product output flow	Fan size	Application distance	Spray gun Code
HIGH QUALITY FINISHES	1.30	XT03	139 g/min. (4.9 oz/min.)	260 mm. (10.24”)	12 - 15 cm. (4.72 - 5.9”)	10142007
GENERAL FINISHES	1.40	XT03	143 g/min. (5.04 oz/min.)	270 mm. (10.6”)		10142008
PRIMERS. HIGH SPEED	1.60	XT03	165 g/min. (5.82 oz/min.)	310 mm. (12.2”)		10142009
FILLERS	1.80	XT03	202 g/min. (7.13 oz/min.)	380 mm. (15”)		10142010

Air consumption at 2 bar (29 psi): 465 L/min. (16.42 cfm)

Recommended pressure: 1.8 - 2.0 bar (26 - 29 psi)

64S X series Aircap. Speed and high energy of atomization. Large surface painting with an exceptional high gloss finish. Available to be combined with high size of nozzles in work with high viscosity products. Maximum speed. Maximum level of gloss.

MEDIUM PRESSURE PAINTED SYSTEM

Recommended application	Nozzle	Aircap	Product output flow	Fan size	Application distance	Spray gun Code
GUN FILLER. HIGH VISCOSITY	2.20	64S	290 g/min. (10.23 oz/min.)	280 mm. (11.02”)	18 - 20 cm. (7 - 7.9”)	10142011

Air consumption at 2 bar (29 psi): 305 L/min. (10.77 cfm)

Recommended pressure: 2.0 - 2.5 bar (29 - 36 psi)

Sagola 3400 Compact

Spot Repair

All our hallmarks in just 365 grams: metal-to-metal technology, aircaps made of duralumin, forged and anodized body...

Ideal for parts painting

The little beast

SAGOLA 3400 COMPACT

The best tool for quick everyday repairs. Adjusted fan size to save product on painting small parts.

Fans of 30 cm. with an air consumption of 190 L/min. Suitable to work with 2 HP compressors.

TECHNICAL DATA		3400 COMPACT
Weight with cup 125 ml.	445.5 grams	0.98 lbs
Weight with cup 650 ml.	544 grams	1.2 lbs
Weight without cup	365 grams	0.80 lbs
Dimensions without cup	15.6 x 1.8 x 15.8 cm.	6.16 x 0.71 x 6.25 “
Air inlet connection	BSP 1/4” Male	
Cup	125 ml. (4.23 fl oz.) or 650 ml. (22 fl oz.) capacity Cup with anti-drip system	
Product filter	Includes 80-mesh product filters	
Recommended working pressure	1.4 - 2.2 bar	20.3 - 31.9 psi
Average sound pressure level	80 dB	
Materials in contact with the product	Anodized aluminum, chromed aluminum, POM, Stainless steel and Teflon	

Sagola 3400 Compact

Key new features

01 NOZZLES. Made of stainless steel.
Maximum application speed.

02 AIRCAPS. Made of duralumin. Highly resistant and light. EPA and HVLP Systems. Totally interchangeable. 4 aircaps to choose. Each compatible with all available fluid nozzle sizes. High transfer HVLP aircap. Designed under the highest environmental standards. Without pressure reducers in the body of the gun We convert from a conventional system to an HVLP system, only changing the aircap. Two high transfer EPA aircaps.

03 "SOFT FLOW" AIR VALVE.
Smooth trigger even at high air pressure levels.
No pressure drops between the 1st and 2nd stage of the trigger. Save paint by regulating air pressure with the trigger partially pulled (1st stage).

04 PRODUCT REGULATOR with FLOATING RING. For precise regulation of product flow.

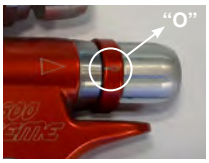

05 IDENTIFYING RINGS OF COLOURS. (COLOR CODE).
Perfect for differentiation of spray guns when there are multiple painters.

06 ANODIZED FORGED ALUMINUM BODY
High strength in just 365 grams

07 "METAL TO METAL" TECHNOLOGY. Product zone free of plastic diffusers, gaskets or inserts in the fluid nozzle. Extremely easy to maintain and clean.

08 One single piece AUTOMATIC PRODUCT PACKING GLAND.
Made of stainless steel. It avoids manipulation and breakage of the glands and makes easier to remove it for a through cleaning of the paint part.

09 AIR FLOW REGULATOR with GAUGE.
The RC1 pressure regulator is the perfect ally for the Non-digital version. Hand tighten, no wrench needed. Perfect closing. Without Teflon coating the air inlet of the gun.

10 SPECIAL MINI TECH JET ROUND AIRCAP.
Convert your Mini Xtreme to an airbrush.
Specially designed for low-viscosity products, lettering and small retouches.

11 CUP OPTIONS. (See page106)
- 125 ml. white cup
- 125 ml. black cup for UV products
- 500 ml. white cup
- 650 ml. white cup

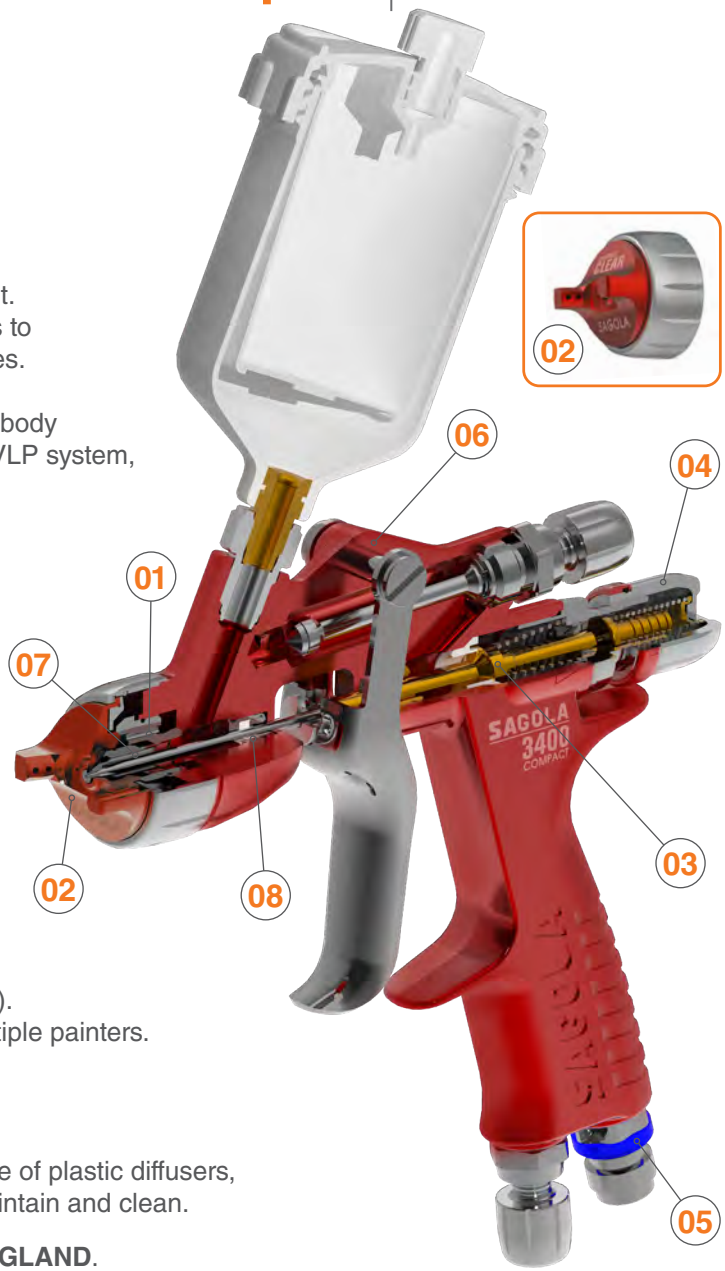

Approved for use by leading paint brands.
Visit www.sagola.com to download our Paint Application Guides.

Sagola 3400 Compact

COMPACT aircaps technical data / Versions

COMPACT CLEAR Air cap. High speed of application in low viscosity products. Suitable for any type of clearcoat. High level of atomization. Sagola EPA high transfer system.

Recommended application	Nozzle	Product output flow	Fan size	Application distance	Spray gun Code	Spray gun Code
SOLVENT BASECOAT "SMART REPAIR"	0.80	49 g/min. (1.7 oz/min.)	110 mm. (4.33")	18 - 20 cm. (7 - 7.9")	10112005	10112013
CLEARCOAT QUICK DRYING HS CLEARCOATS "SMART REPAIR"	1.00	97 g/min. (3.4 oz/min.)	195 mm. (7.68")		10112006	10112014
UHS CLEARCOATS "SPOT REPAIR"	1.20	162 g/min. (5.7 oz/min.)	260 mm. (10.24")		10112007	10112015
HS/UHS CLEARCOATS "SPOT REPAIR"	1.30	165 g/min. (5.8 oz/min.)	280 mm. (11.02")		-	10112016
PRIMERS FILLERS	1.40	174 g/min. (6.1 oz/min.)	280 mm. (11.02")		-	10112017
Air consumption at 2 bar (29 psi): 190 L/min. (6.71 cfm)			**Recommended pressure: 1.0 - 2.0 bar (14.5 - 29 psi)**		125 ml. Cup	650 ml. Cup

COMPACT TECH Air cap. Ideal for quick drying clearcoats. Low viscosity products. Lettering and small retouches.

Recommended application	Nozzle	Product output flow	Fan size	Application distance	Spray gun Code
PRIMERS "SMART REPAIR"	0.60	96 g/min. (3.4 oz/min.)	50 mm. (1.96")	18 - 20 cm. (7 - 7.9")	10112011
PRIMERS "SMART REPAIR"	1.00	123 g/min. (4.3 oz/min.)	195 mm. (7.68")		10112012
Air consumption at 2 bar (29 psi): 52 L/min. (1.84 cfm)			**Recommended pressure: 0.5 - 1.0 bar (7.2 - 14.5 psi)**		500 ml. Cup

"Smart Repair" Kit

All the equipment needed for spot repairs and small to medium surfaces.

Includes:
- 3400 Compact 1.0 (BASE)
- 3400 Compact 1.0 (HVLP)
- 1.2 mm. Nozzle + needle kit
- 0.6 mm. Nozzle + needle kit
- Compact Tech Air cap
- 125 & 500 ml. cup
- 2 x RC1 air flow regulators
- 2 x Quick couplings
- 2 3M™ PPS couplings
- Lubricant grease
- Accessories

Code
10141708

Types of cups (see page 104)

500 & 650 ml. White	125 ml. White	125 ml. Black

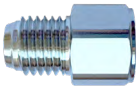

Cup couplings
125 ml. (includes)
Code 55711507

Sagola 3400 Compact

COMPACT aircaps technical data / Versions

COMPACT BASE Air cap. Special for waterborne product applications. Uniformity in colour application. Sagola EPA high transfer system.

Recommended application	Nozzle	Product output flow	Fan size	Application distance	Spray gun Code	Spray gun Code
SOLVENT BASECOAT "SMART REPAIR"	0.80	49 g/min. (1,7 oz/min.)	110 mm. (4,33")	18 - 20 cm. (7 - 7,9")	10112001	-
SOLVENT BASECOAT WATERBORNE BASEOCATS	1.00	97 g/min. (3,4 oz/min.)	195 mm. (7,68")		10112002	-
WATERBORNE BASEOCATS	1.20	162 g/min. (5.7 oz/min.)	260 mm. (10.24")		10112003	10112018
PRIMERS AND FILLERS	1.30	165 g/min. (5.8 oz/min.)	280 mm. (11.02")		-	10112019
PRIMERS AND FILLERS	1.40	174 g/min. (6.1 oz/min.)	280 mm. (11.02")		-	10112020
Air consumption at 2 bar (29 psi): 190 L/min. (6.71 cfm)			**Recommended pressure: 1.0 - 2.0 bar (14.5 - 29 psi)**		125 ml. Cup	650 ml. Cup

3400 Compact spray gun **especially** for **UV light** contact drying product applications.

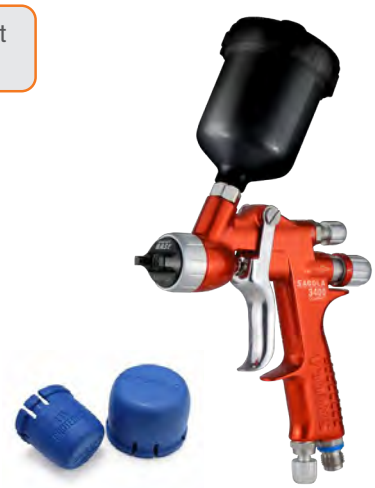

Recommended application	Nozzle	Product output flow	Fan size	Application distance	Spray gun Code
WATERBORNE AND SOLVENT BASECOAT U.V. PRIMER "SPOT REPAIR"	1.20 BASE	162 g/min. (5.7 oz/min.)	260 mm. (10.24")	18 - 20 cm. (7 - 7.9")	10112004
	1.20 CLEAR	162 g/min. (5.7 oz/min.)	260 mm. (10.24")	18 - 20 cm. (7 - 7.9")	10112008
Air consumption at 2 bar (29 psi): 190 L/min. (6.71 cfm)			**Recommended pressure: 1.0 - 2.0 bar (14.5 - 29 psi)**		125 ml. **Black** Cup

UV protective cap for ultraviolet products. Included.

COMPACT HVLP Air cap. Uniformity in colour application. deal for waterborne products and quick-drying paints (HS). Sagola HVLP high transfer system.

Recommended application	Nozzle	Product output flow	Fan size	Application distance	Spray gun Code	Spray gun Code
PRIMERS "SMART REPAIR"	1.00	80 g/min. (1.7 oz/min.)	155 mm. (6.1")	18 - 20 cm. (7 - 7.9")	10112009	-
PRIMERS "SPOT REPAIR"	1.20	123 g/min. (3.4 oz/min.)	195 mm. (7.68")		10112010	-
PRIMERS "SPOT REPAIR"	1.30	133 g/min. (5.7 oz/min.)	215 mm. (8.46")		-	10112021
PRIMERS AND FILLERS	1.40	135 g/min. (4.7 oz/min.)	215 mm. (8.46")		-	10112021
Air consumption at 2 bar (29 psi): 325 L/min. (11.48 cfm)			**Recommended pressure: 1.0 - 2.0 bar (14.5 - 29 psi)**		125 ml. Cup	650 ml. Cup

Sagola 3300 GTO gravity

From dye to adhesives or gun putties. There's nothing better than the 3300 GTO spraygun. Wide variety of aircaps and fluid nozzles from 1.0 mm. up to 2.8 mm.

Finishes: 1.0 - 1.4 mm.
Primers: 1.6 - 1.8 mm.
Gun putties: 2.0 - 2.8 mm.

Unreachable technologies for many..., incorporated in our 3300 GTO range of guns.

Versatility

HVLP and EPA high transfer Aircaps made of duralumin. Forged aluminum body with 'soft touch' satin finish. No joints or plastic inserts in the product area. One-piece self-adjusting packing gland. Ergonomic trigger made of stainless steel.

TECHNICAL DATA		3300 GTO GRAVITY
Weight with cup	662.4 grams	1.46 lbs
Weight without cup	475 grams	1.05 lbs
Dimensions without cup	18.2 x 17.8 cm.	7.16 x 7.05 "
Width of handle	1.9 cm.	0,75 "
Air inlet connection	BSP 1/4" Male	
Cup	650 ml. capacity (22 fl oz.) Cup with anti-drop system	
Recommended working pressure	2.2 bar (1.8 bar HVLP)	32 psi (26 psi HVLP)
Average sound pressure level	80 dB	
Materials in contact with the product	Anodized aluminum, stainless steel, PTFE, POM and nylon	

M2M™
Metal to Metal Technology

Sagola 3300 GTO gravity

Spray gun main news

01 SUPER LIGHT. -METAL TO METAL- TECHNOLOGY.
No sealing joints between components.

02 High strength FORGED ALUMINUM BODY.
REGISTER DC 924667-0004 DESIGN REGISTER.

03 NEW ALUMINUM AIRCAPS.
GTO TECH / GTO HVLP / 3300 EPA / 3300 EVO
Ultra-fine atomization and larger fans. Designed for the best response at any pressure. With mechanized aerodynamic caps which eliminate turbulence and reverse painting.

04 One single piece AUTOMATIC PAINT PACKING GLAND.
Unique in the market. It avoids manipulation and breakage of the glands and makes it easier to remove for thorough cleaning of the paint area.

05 ERGONOMIC TRIGGER.
Made of stainless steel. It reduces fatigue.

06 NOZZLE AND NEEDLE.
Made of stainless steel.

07 "SOFT FLOW" AIR VALVE.
Smooth trigger even at high air pressure levels. No pressure drops between the 1st and 2nd stage of the trigger. Save paint by regulating air pressure with the trigger partially pulled (1st stage).

08 SINGLE SHAFT SYSTEM.
Directly continuing Xtreme model series with a simplified design, synchronized performance in any kind of situation, fewer parts, and maintenance reduction.

09 NEW COLOUR IDENTIFIER.
Perfect for differentiation spray guns when there are multiple painters. (COLOR CODE)

10 RC2 **AIR FLOW REGULATOR with PRESSURE GAUGE.** It maintains the working pressure according to the parameters of Emissions regulations. (Green scale). Standard in TECH / HVLP bodyshop versions. GTO CAR Version. Code 40000335

Approved for use by leading paint brands. Visit www.sagola.com to download our Paint Application Guides.

Sagola 3300 GTO gravity

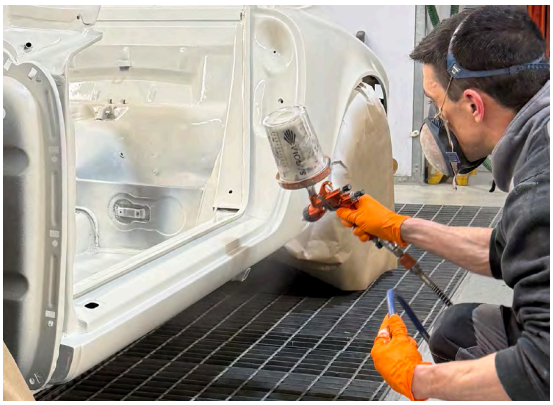

GTO CAR aircaps technical data / Versions

GTO EPA Aircap. Sagola EPA high transfer system. Specially designed to obtain a smooth and uniform finish. Saving time and consumables in the sanding process.

The reduction of spray mist (overspray), makes it suitable for use outside the booth in preparation areas; also achieving a significant reduction in the consumption of primer and in the emission of toxic components for the environment.

REGULATIONS:
2006/42/UE, EN 1953:2013
UNE EN-1127-1:2012, 2014/34/CE
ATEX Ex II 2G T4 x

EPA PAINTED SYSTEM

Recommended application	Nozzle	Product output flow	Fan size	Application distance	Spray gun Code
SANDING PRIMERS	1.60	156 g/min. (5.5 oz/min.)	225 mm. (8.9")	18 - 20 cm. (7 - 7.9")	10141563
	1.80	184 g/min. (6.5 oz/min.)	245 mm. (9.6")		10141564

Air consumption at 2 bar (29 psi): 250 L/min. (8.8 cfm)

Recommended pressure: 1.8 - 2.0 bar (26.1 - 29 psi)

3300 GTO spraygun **version**, with EPA nozzle and tips available in 1.40, 1.60 and 1.80 mm., with a robust and practical **transport case**.

EPA PAINTED SYSTEM

Recommended application	Nozzle	Product output flow	Fan size	Application distance	Spray gun Code
HIGH QUALITY FINISHES DYES	1.40	154 g/min. (5.4 oz/min.)	225 mm. (8,9")	18 - 20 cm. (7 - 7,9")	10141578
FINISHES	1.60	156 g/min. (5.5 oz/min.)	225 mm. (8,9")		10141579
PRIMERS	1.80	184 g/min. (6.5 oz/min.)	245 mm. (9,6")		10141580

Air consumption at 2 bar (29 psi): 250 L/min. (8.8 cfm)

Recommended pressure: 1.8 - 2.0 bar (26.1 - 29 psi)

Sagola 3300 GTO gravity

GTO CAR aircaps technical data / Versions

GTO HVLP Aircap. Sagola HVLP System. Large fan size. Low aircap pressure to paint closer to the part and increase the transfer rate.

Smooth and uniform finish to save time and consumables in the sanding process.
Reduction of spray mist (overspray).

HVLP PAINTED SYSTEM

Recommended application	Nozzle	Product output flow	Fan size	Application distance	Spray gun Code
FINISHES	1.60	172 g/min. (6 oz/min.)	260 mm. (10.2”)	12 - 15 cm. (4.72 - 5.90”)	10141556
PRIMERS FONDS	1.80	193 g/min. (6.8 oz/min.)	295 mm. (11.6”)		10141557

Air consumption at 2 bar (29 psi): 360 L/min. (12.71 cfm)

Recommended pressure: 1.5 - 2.0 bar (21.7 - 29 psi)

GTO EVO Aircap. Sagola EPA high transfer system. Maximum atomization quality to achieve a fine and stretched finish. large fan size.

EPA PAINTED SYSTEM

Recommended application	Nozzle	Product output flow	Fan size	Application distance	Spray gun Code
FINISHES DYES	1.30	172 g/min. (6 oz/min.)	260 mm. (10.2”)	18 - 20 cm. (7 - 7.9”)	10141559
FINISHES HIGH GLOSS LACQUERS	1.40	179 g/min. (6.3 oz/min.)	280 mm. (11”)		10141560

Air consumption at 2 bar (29 psi): 255 L/min. (9.01 cfm)

Recommended pressure: 1.8 - 2.0 bar (26.1 - 29 psi)

GTO 64S/62S Aircaps. Maximum product output flow and atomization power for the application of putties on large surfaces. Smooth and uniform finish. Saving time and consumables in the sanding process.

MEDIUM PRESSURE PAINTED SYSTEM

Recommended application	Nozzle	Product output flow	Fan size	Application distance	Spray gun Code
PRIMERS WATERBORNE CLEARCOAT	2.20 **64S**	300 g/min. (10.6 oz/min.)	300 mm. (11.8”)	18 - 20 cm. (7 - 7.9”)	10141572
GUN-FILLERS POLYESTER FORGE EFFECT	2.80 **62S**	397 g/min. (14 oz/min.)	250 mm. (9.8”)		10141574

Air consumption at 2 bar (29 psi) 64S: 310 L/min. (10.9 cfm)
Air consumption at 2 bar (29 psi) 62S: 270 L/min. (9.5 cfm)

Recommended pressure: 2.0 - 2.5 bar (29 - 36.2 psi)

Sagola 475 XTech

The importance of small details

Precision solutions for tiny details and retouches.
Very light injected-aluminium body.
Very high quality of spray.

TECHNICAL DATA		475 XTECH
Weight with cup (with air flow regulator)	339.4 grams	0.75 lbs
Weight without cup (with air flow regulator)	272.9 grams	0.60 lbs
Dimensions with cup (with air flow regulator)	12.1 x 28.3 cm.	4.76 x 11.14 “
Dimensions without cup	10.9 x 15.2 cm.	4.29 x 5.98 “
Width of handle	1.8 cm.	0.71 “
Air inlet connection	BSP 1/4” Male	
Cup	125 ml. (4.23 fl oz.) capacity Cup with anti-drip system	
Product filter	Includes 80-mesh product filters	
Recommended working pressure	2 bar	29 psi
Average sound pressure level	80 dB	
Materials in contact with the product	Anodized aluminum, chromed aluminum, POM, Stainless steel and Teflon	

Sagola 475 XTech

The SAGOLA 475 XTech spraygun that due to its reduced dimension becomes ideal for shadings, little retouches and/or painting of small parts.

Injected aluminum body, very light. Manufactured with Sagola high technology to provide a very high quality of atomization.

This model incorporates the high quality gravity cup with a 125 ml capacity. Includes paint filter.

Available with three aircaps. Variety of nozzles to give great precision to the retouching and painting of parts.

The **Sagola 475 XTech**, designed for **precision solutions** in the small details and retouching of bodyshop parts.

05 AIRCAP
High quality spray at feathering and retouches.
Nozzle available: 0.50 / 0.80

10 AIRCAP
Quick and versatile. Special for metallics and clearcoats.
Nozzle available: 1.00

R5 AIRCAP
Maximum precision at the tiniest feathering. Definition and regulation. Similar to an airbrush.
Nozzle available: 0.50

Very light injected-aluminium body
Injected-aluminium body. A highly manageable spraygun with reduced dimensions and low weight.

High quality of spray
High transfer and low air consumption.

Bigger cups
Option to adapt the 500 ml. and 650 ml. cups to the gun through the adapter coupling. **Code 55711513**

Air flow regulator
Incorporates air flow regulator, high quality and precision.

Code 56418417

Technical data / Versions

Recommended application	Nozzle	Aircap	Product output flow	Fan size	Application distance	Spray gun Code
RETOUCHES, BLENDING, DEMOLDING AGENTS AND PAINTING OF SMALL PARTS	0.50	**05**	60 g/min. (2.12 oz/min.)	140 mm. (5.5”)	18 - 20 cm. (7 - 7.9”)	**20140801**
	0.80	**05**	73 g/min. (2.57 oz/min.)	162 mm. (6.4”)		**20140802**
	1.00	**10**	90 g/min. (3.17 oz/min.)	160 mm. (6.3”)		**20140803**
	0.50	**R5**	38 g/min. (1.34 oz/min.)	-		**20140804**

125 ml. cup

Air consumption at 2 bar (29 psi):
05 Aircap: 100 L/min. (3.53 cfm)
10 Aircap: 110 L/min. (3.88 cfm)
R5 Aircap: 45 L/min. (1.59 cfm)

Recommended pressure:
1.5 - 2.0 bar (21.7 - 29 psi)

Accessories

Code	Description
56418081	125 ml. (4.23 fl oz) Gravity cup - *includes product filter*
56418079	200 ml. (6.76 fl oz) Gravity cup - *includes product filter*
56418061	Product filter (6 units)
55711513	Adapter coupling for 500 ml. (3400 Compact) and 650 ml. (3300 GTO) cups

Sagola Classic Pro XD

The Sagola Classic Pro XD Primer Gun incorporates EPA and HVLP high transfer air caps.

"Metal to metal" technology. No joints or plastic parts in the product area.

Nozzle and needle made of stainless steel.

Matt chrome-plated injected aluminum body.

Maximum ergonomics and comfort.

High transfer in finishes and primers

TECHNICAL DATA		CLASSIC PRO XD
Weight with cup	665 grams	1.47 lbs
Weight without cup	480.8 grams	1.06 lbs
Dimensions with cup	17.9 x 17.7 cm.	7.05 x 6.96 "
Width of handle	1.9 cm.	0.75 "
Air inlet connection	BSP 1/4" Male	
Cup	650 ml. (22 fl oz.) capacity Cup with anti-drip system	
Recommended working pressure	2 bar	29 psi
Materials in contact with the product	Anodized aluminum, chromed aluminum, POM, Stainless steel and Teflon	

Sagola Classic Pro XD

Classic Pro XD aircaps technical data / Versions

21 EPA Aircap. Sagola EPA high transfer technology that combines high transfer rates with high atomization capacity. Low air consumption.

EPA PAINTED SYSTEM

Recommended application	Nozzle	Product output flow	Fan size	Application distance	Spray gun Code
FINISHES	1.40	143 g/min. (5.04 oz/min.)	285 mm. (11.2”)	18 - 20 cm. (7 - 7.9”)	10141620
FINISHES AND PRIMERS	1.60	147 g/min. (5.19 oz/min.)	290 mm. (11.4”)		10141623
FONDS AND PRIMERS	1.80	179 g/min. (6.31 oz/min.)	320 mm. (12.6”)		10141625

Air consumption at 2 bar (29 psi):
225 L/min. (7.95 cfm)

Recommended pressure:
1.5 - 2.0 bar (21.7 - 29 psi)

HVLP Aircap. Compliance with the strictest environmental regulations. High Transfer HVLP Technology. High application speed.

HVLP PAINTED SYSTEM

Recommended application	Nozzle	Product output flow	Fan size	Application distance	Spray gun Code
FINISHES	1.40	143 g/min. (5.04 oz/min.)	285 mm. (11.2”)	12 - 15 cm. (4.7 - 5.9”)	10141621
FINISHES AND PRIMERS	1.60	202 g/min. (7.13 oz/min.)	250 mm. (9.8”)		10141624
PRIMERS HIGH THICKNESS	1.80	235 g/min. (8.29 oz/min.)	280 mm. (11.2”)		10141626
PRIMERS HIGH VISCOSITY	2.50	270 g/min. (9.52 oz/min.)	325 mm. (12.8”)		10141631

Air consumption at 2 bar (29 psi):
355 L/min. (11.54 cfm)

Recommended pressure:
1.5 - 2.0 bar (21.7 - 29 psi)

25 & 36 Aircaps. Specially designed for the application of high thickness fillers.
28 Aircap. The best option for the application of gun fillers on large surfaces.
High product flow rates for thick products.

MEDIUM PRESSURE PAINTED SYSTEM

Recommended application	Nozzle	Aircap	Product output flow	Fan size	Application distance	Spray gun Code
PRIMERS HIGH THICKNESS	2.00	**25**	218 g/min. (7.69 oz/min.)	250 mm. (9.8”)	18 - 20 cm. (7 - 7.9”)	10141627
PRIMERS HIGH VISCOSITY	2.50	**36**	249 g/min. (8.78 oz/min.)	280 mm. (11.2”)		10141629
GUN FILLER	2.80	**28**	263 g/min. (9.29 oz/min.)	250 mm. (9.8”)		10141630

Air consumption at 2 bar (29 psi):
25 Aircap: 155 L/min. (5.47 cfm)
36 Aircap: 205 L/min. (7.24 cfm)
28 Aircap: 240 L/min. (8.48 cfm)

Recommended pressure:
1.8 - 2.5 bar (26.10 - 36.26 psi)

Classic Lux Gravity

Ergonomic
Lightweight and comfortable
Versatile
Variety of applications

Robustness and versatility

Conventional painting system
Nozzles and needles in stainless steel
Matt chrome injected aluminum body
Maximum ergonomics and comfort

TECHNICAL DATA		CLASSIC LUX GRAVITY
Weight with cup	674 grams	1.49 lbs
Weight without cup	485.5 grams	1.07 lbs
Dimensions with cup	17.7 x 10.5 x 33 cm.	6.97 x 4.13 x 13 “
Dimensions without cup	17.7 x 1.9 x 17.1 cm.	6.97 x 0.75 x 6.73 “
Air inlet connection	BSP 1/4” Male	
Cup	650 ml. (22 fl oz.) capacity Cup with anti-drip system	
Recommended working pressure	2 bar	29 psi
Materials in contact with the product	Anodized aluminum, chromed aluminum, POM, Stainless steel and Teflon	

Classic Lux Gravity

The SAGOLA Classic LUX gun offers one of the best quality/ price ratios in its range of conventional primer guns.

With a new body design and improved ergonomics, the Classic LUX spraygun expands the range of responses and application solutions.

Single shaft design. Less number of parts, minimum maintenance. No joints between the air and the paint. One piece packing gland. Internal air distributor.

Nozzles and needles in stainless steel. Air, product and fan flow regulators.

40 AIRCAP
Primers and fillers
Available nozzles:
1.40 / 1.60 / 1.80

41 AIRCAP
Primers and fillers
High thickness
Available nozzles: 2.00

42 AIRCAP
Fillers
High viscosity. Gun fillers.
Available nozzles: 2.50

Cup

650 ml. cup capacity. Includes anti-drip system and paint filter.

Low air consumption

High quality of aircaps, with low air consumption.

Body

Novelty in the chrome of the gun body. Matte chrome.

Nozzle and Needle

Made of stainless steel.

Classic Lux aircaps technical data / Versions

Recommended application	Nozzle	Aircap	Product output flow	Fan size	Application distance
FINISHES	1.40	40	218 g/min. (7.7 oz/min.)	210 mm. (8.26")	18 - 20 cm. (7 - 7.9")
PRIMERS AND FILLERS	1.60	40	125 g/min. (4.4 oz/min.)	215 mm. (8.46")	
FILLERS	1.80	40	217 g/min. (7.6 oz/min.)	250 mm. (9.84")	
FILLERS HIGH THICKNESS	2.00	41	206 g/min. (7.3 oz/min.)	255 mm. (10.04")	18 - 20 cm. (7 - 7.9")
PUTTIES	2.50	42	144 g/min. (5.1 oz/min.)	215 mm. (8.46")	

Air consumption at 2 bar (29 psi):
40 Aircap: 190 L/min. (6.71 cfm)
41 Aircap: 210 L/min. (7.42 cfm)
42 Aircap: 220 L/min. (7.77 cfm)

Recommended pressure:
1.5 - 2.5 bar (21.7 - 36.26 psi)

Spray gun Code
20141406
20141401
20141402
20141404
20141403

Accessories

Code	Description
56418420	Gravity cup 650 ml. (6.76 fl oz) - *includes product filter*
56418017	Gravity cup product filter 650 ml. (10 units)
40000335	RC2 Air flow regulator with pressure gauge

RC2 Air flow regulator with pressure gauge
(See page 71)

Sagola X4100 series suction

X4100 SERIES

The Legend of Industrial finishing

TECHNICAL DATA		X4100 SERIES SUCTION
Weight without deposit	496 grams	1.1 lbs
Weight with deposit	722.6 grams	1.39 lbs
Dimensions without deposit	17.2 x 17.3 cm.	6.78 x 6.83 “
Width of handle	1.9 cm.	0.75 “
Dimensions with deposit	17.2 x 10.5 x 34.2 cm.	6.77 x 4.13 x 13.46 “
Air inlet connection	BSP 1/4” Male	
Deposit	1,000 ml. capacity (34 fl oz.) Cup with anti-drip system	
Product filter	100 mesh	
Recommended working pressure	2 bar (29 psi)	
Average sound pressure level	80 dB	
Materials in contact with the product	Anodized aluminum, chromed aluminum, POM, Stainless steel, Teflon and Nylon	

Sagola X4100 series suction

The SAGOLA X4100 series is the specific spraygun for the industrial painting sector. The incorporation of new technological aspects makes it the perfect tool for highly demanding jobs in terms of quality of finish, robustness and ergonomics.

Prepared for continuous working days and painting of large surfaces.

Ergonomics

Displacement of the center of gravity thanks to the aluminum construction of the aircaps.

Lighter forged aluminum body. Fatigue reduction in series works.

Hardness

Lower maintenance costs = more productivity thanks to our 'metal to metal' technology: No gaskets or plastic parts in the product area.

Forged and anodized aluminum body of great robustness and high protection against corrosion.

Large deposit capacity, with double watertight paint closure system and flange closure with gasket and anti-drip lid. The sprung weight reduces fatigue compared to higher deposits.

Speed

Sagola DVR suction technology to achieve unbeatable application speeds.

Product savings

Sagola EPA high transfer aircaps. Perfect balance between finishing quality and product savings.

96 X series Aircap. The 96 X aircap is a legend in industrial finishing. Its high application speed and atomization quality stand out. It is the reference finishing aircap for our most representative suction spraygun.

Maximum speed. Maximum level of gloss.

MEDIUM PRESSURE PAINTED SYSTEM

Recommended application	Nozzle	Aircap	Product output flow	Fan size	Application distance	Spray gun Code
HIGH QUALITY FINISHES	1.40	**96**	168 g/min. (5.92 oz/min.)	235 mm. (9.3")	18 - 20 cm. (7 - 7.9")	**10121001**
	1.60 S	**96**	235 g/min. (8.29 oz/min.)	295 mm. (11.6")		**10121006**
GENERAL FINISHES PRIMERS	1.80	**96**	228 g/min. (8.04 oz/min.)	285 mm. (11.2")		**10121003**

Air consumption at 2 bar (29 psi): 280 L/min. (9.88 cfm)

Recommended pressure: 2.0 - 2.5 bar (29 - 36 psi)

XT01 X series Aircap. The perfect balance between finish quality and product savings. Versatility to make it compatible with products of different viscosities from fillers to enamels.

High transfer. High quality finishes.

EPA PAINTED SYSTEM

Recommended application	Nozzle	Aircap	Product output flow	Fan size	Application distance	Spray gun Code
GENERAL FINISHES	1.60 S	**XT01**	241 g/min. (8.5 oz/min.)	305 mm. (12")	18 - 20 cm. (7 - 7.9")	**10121007**
HIGH SPEED LARGE SURFACES	1.80	**XT01**	234 g/min. (8.25 oz/min.)	295 mm. (11.6")		**10121005**

Air consumption at 2 bar (29 psi): 295 L/min. (10.42 cfm)

Recommended pressure: 2.0 - 3.0 bar (29 - 44 psi)

Sagola 3300 GTO suction

Ideal for painting large surfaces, machinery and industrial vehicles

Continuous working days

Versatility. Industrial finishes

With the 3300 GTO suction spraygun, SAGOLA offers a very high level product with an excellent quality / price ratio. This suction spraygun is characterized by its versatility.

High performance spraygun. High speed application for painting large surfaces. Offers large fan sizes.

Ideal for the application of enamels, varnishes, primers and basecoats.

High-end aluminum aircaps. Nozzles and needles made of stainless steel.

TECHNICAL DATA		3300 GTO SUCTION
Weight with deposit	869 grams	1.92 lbs
Weight without deposit	474 grams	1.04 lbs
Dimensions with deposit	18.7 x 10.6 x 28.7 cm.	7.36 x 4.17 x 11.31 “
Dimensions without deposit	17.8 x 17.5 cm.	7.01 x 6.91 “
Width of handle	1.9 cm.	0.75 “
Air inlet connection	BSP 1/4” Male	
Deposit	1,000 ml. capacity (34 fl oz.) Cup with anti-drip system	
Product filter	Nylon mesh	
Recommended working pressure	2 - 3 bar (29 - 43.5 psi)	
Average sound pressure level	80 dB	
Materials in contact with the product	Anodized aluminum, chromed aluminum, POM, Stainless steel, Teflon and Nylon	

Sagola 3300 GTO suction

Spraygun main news

01 SUPER LIGHT. -METAL TO METAL- TECHNOLOGY.
No sealing joints between components.

02 High strength FORGED ALUMINUM BODY.
REGISTER DC 924667-0004 DESIGN REGISTER.

03 ALUMINUM AIRCAPS.
3300 EPA. Ultra-fine atomization and larger fans. Designed for the best response at any pressure. With mechanized aerodynamic caps which eliminate turbulence and reverse painting.

04 One single piece AUTOMATIC PAINT PACKING GLAND.
Unique in the market. It avoids manipulation and breakage of the glands and makes it easier to remove for the thorough cleaning of the paint area.

05 ERGONOMIC TRIGGER. Made of stainless steel. It reduces fatigue.

06 NOZZLE AND NEEDLE. Made of stainless steel.

07 SINGLE SHAFT SYSTEM.
Directly continuing Xtreme model series with a simplified design, synchronized performance in any kind of situation, fewer parts, and maintenance reduction.

08 HIGH PRECISION AIR INLET REGULATOR. Modern design without sharp edges, it makes easier cleaning.
Higher control precision. Ideal for quick adjustment.

09 AIR FLOW REGULATOR with PRESSURE GAUGE.
It maintains the working pressure according to the parameters of Emissions regulations. (Green scale). Code 40000335

10 1L SUCTION DEPOSIT.
made of aluminum. Maximum use of the product. Watertight system with double closure and anti-drip lid.

3300 GTO aircaps technical data / Versions

3300 EPA Aircap. Versatility and perfect adaptation to any type of industrial painting project. High gloss finishes, primers and high viscosity paints. Its sustained air consumption, together with the high percentages of product transfer, make SAGOLA's EPA aircaps the most balanced system on the market.

EPA PAINTED SYSTEM

Recommended application	Nozzle	Aircap	Product output flow	Fan size	Application distance	Spray gun Code
HIGH QUALITY FINISHES	1.40	3300 EPA	179 g/min. (6.3 oz/min.)	245 mm. (9.6")	18 - 20 cm. (7 - 7.9")	10120910
GENERAL FINISHES	1.60	3300 EPA	156 g/min. (5.5 oz/min.)	225 mm. (8.9")		10120911
FINISHES AND PRIMERS	1.80	3300 EPA	184 g/min. (6.5 oz/min.)	245 mm. (9.6")		10120912

Air consumption at 2 bar (29 psi): 250 L/min. (8.8 cfm)

Recommended pressure: 2.0 - 2.5 bar (29 - 36 psi)

Sagola Turbo 3000 Pro

High performance autonomous HVLP painting equipment.

Three-stage turbine. Manufactured with the highest quality materials. Includes Sagola 455 gun and 8 meters of special hose for the turbine.

Ideal for painting jobs on construction sites and assemblies.

Equipment recommended for the application of dyes, lacquers, enamels, varnishes, primers, texturing, forge effect,...

Sagola 455 spraygun, with fan and product regulators. Metal product deposit with non-return valve, flange closure and anti-drip lid. Stainless steel nozzles and needles. Large fan size.

TECHNICAL DATA

	TURBO 3000 PRO	
Weight	10.35 Kilograms	22.8 lbs
Dimensions	16.5 x 16.5 x 38.5 cm.	6.5 x 6.5 x 15.16 “
Power	1,350 w	
Electrical power supply	220 V - 50 Hz	
Maximum engine consumption	6.1 A	
Air outlet connection	BSP 3/4” x 14H Male	
Free flow	1,510 L/min	53.3 cfm
Maximum pressure	0.31 bar	4.35 psi
Hose length	8 meters	315 “
Transfer	75%	

REGULATIONS:

2006/42/UE
2014/35/UE Low voltage
2014/30/CE, 2011/65/CE and 2002/96/CE Electromagnetic compatibility

VERSIONS / ACCESSORIES

Description		Code
Turbine TURBO 3000 PRO + hose 8 m. + gun Sagola 455		**30640201**
Air filter kit (6 units)	**Accessory**	**56418597**
Complete hose for turbines. 8 meters	**Accessory**	**30060002**
Sagola 455 Spraygun	**Accessory**	see page 59

Product regulator by roulette with flow indicator

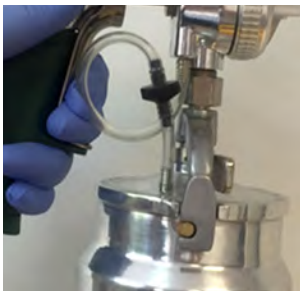

Non-return valve

Special hose for turbines. Includes product regulator.

Sagola Turbo 2200 Pro

Autonomous turbine equipment, with a power of 1300 w, for all types of industry.

Excellent atomization. Ideal for painting jobs on construction sites and assemblies.

Sagola 455 spraygun, with fan and product regulators. Metal product deposit with non-return valve, flange closure and anti-drip lid. Stainless steel nozzles and needles. Large fan size.

6 meter length hose.

Removable double air filter.

TECHNICAL DATA

		TURBO 2200 PRO
Weight	11 Kilograms	24.25 lbs
Dimensions	28 x 28 x 30 cm.	11 x 11 x 11.8 “
Power	1,350 w	
Electrical power supply	220 V - 50 Hz	
Maximum engine consumption	6.1 A	
Air outlet connection	BSP 3/4” x 14H Male	
Free flow	1,632 L/min	57.6 cfm
Maximum pressure	0.3 bar	4.35 psi
Hose length	6 meters	315 “
Transfer	75%	

REGULATIONS:

2006/42/UE
2014/35/UE Low voltage
2014/30/CE, 2011/65/CE and 2002/96/CE Electromagnetic compatibility

VERSIONS / ACCESSORIES

Description		Code
Turbine TURBO 2200 PRO + hose 6 m. + spraygun Sagola 455		**30640401**
Air filter kit (6 units)	**Accessory**	**56418663**
Complete hose for turbines. 6 meters	**Accessory**	**30060023**
Sagola 455 Spray gun	**Accessory**	see page 59

Sagola 455 spray gun

High quality gun, special for turbines. Includes fan and product regulator. Deposit with non-return valve, flange closure and anti-drip lid. Nozzle and needle in stainless steel. Large fan size.

VERSIONS

Application	Version	Code
Finishes, fonds and primers	1.00 [80]	**10110502**
High gloss finishes. Dyes	1.20 [80]	**10110503**
General finishes	1.40 [80]	**10110501**
Primers. Plastics. Viscous products	1.80 [80]	**10110505**
Textured. Forge effect	2.00 [80]	**10110506**

Sagola V4000

Finishing, robustness and durability

The V4000 automatic spray gun is 100% compatible with the X 4100 series range of aircaps and nozzles, making it possible to replicate the finishes of the automatic paint station with a manual spray gun and vice versa. In this way, it is possible to complement both systems (manual and automatic) in the same project.

TECHNICAL DATA		Without BASE		With BASE	
		DMM	DMR	QCM	QCR
Weight		915 g. / 2.02 lbs	987 g. / 2.18 lbs	1,240 g. / 2.73 lbs	1,318 g. / 2.90 lbs
Dimensions (mm)		164 x 45 x 104 mm.		164 x 45 x 174 mm.	
Dimensions (inches)		6.5 x 1.8 x 4.1 “		6.5 x 1.8 x 6.8 “	
Pilot inlet connection		Quick coupling to hose Ø 6 mm.		Quick coupling to hose Ø 6 mm.	
Air inlet connection		Quick coupling to hose Ø 8 mm.		Quick coupling to hose Ø 8 mm.	
Product inlet connection		Coupling to hose Ø 6x8 mm.		Coupling to hose Ø 6x8 mm.	
Max. air pressure		8 bar / 116 psi		8 bar / 116 psi	
Recommended maximum air pressure		2 - 2.5 bar / 29 - 36 psi		2 - 2.5 bar / 29 - 36 psi	
Materials in contact with the product		Anodized aluminum, chromed aluminum, POM, INOX, Teflon and Nylon			
Recommended application distance	EPA	18 - 20 cm. 7 - 7.87 “		18 - 20 cm. 7 - 7.87 “	
	HVLP	12 - 15 cm. 4.72 - 5.9 “	15 - 20 cm. 5.9 - 7.87 “	15 - 20 cm. 5.9 - 7.87 “	15 - 20 cm. 5.9 - 7.87 “
	Conventional	20 - 25 cm. 7.87 - 9.84 “		18 - 22 cm. 7.08 - 8.66 “	20 - 25 cm. 7.87 - 9.84 “
ATEX		Ex II 2G T4 x			

Sagola V4000

New range V4000 automatic spray guns

Sagola launches its new line of automatic spray guns, the V4000. All the quality standards of its predecessor the 4041 are kept, but adding new features.

The perfect tool for high demand automatic lines projects in terms of finish quality, robustness and durability. Available in both standard version (DMR) and base version (QCR).

Automated fan size regulation. An air inlet replaces the manual regulator wheel.

DMM VERSION

Direct Mount
Manual Fan Adjustment

QCM VERSION

Quick Change Manifold
Manual Fan Adjustment

DMR VERSION

Direct Mount
Remote Fan Adjustment

QCR VERSION

Quick Change Manifold
Remote Fan Adjustment

Reduction of size

We try to reduce its dimensions as much as possible, thus improving manageability and consequently accessibility to painting pieces with complex surfaces.

Robot version (DMR/QCR)

Automated fan size regulation. An air inlet replaces the manual regulator wheel.

Abrasives version

Tungsten Carbide nozzles and needles to spray abrasive fluids. Great hardness and resistance to abrasion.

Version with base

Same features as the standard version (DMM/DMR) but including a base that simplifies maintenance and cleaning tasks. Quick disassembly system.

Sagola V4000

V4000 spray gun main news

01 SUPER LIGHT. -METAL TO METAL-TECHNOLOGY.
Absence of gaskets, O-rings or plastic parts in the fluid area.

02 ANODIZED ALUMINUM BODY
Great robustness. High protection against corrosion.

03 ANODIZED ALUMINUM AIRCAPS
(corrosion free). Great resistance and durability. Suitable for aggressive environments.

04 AUTOMATIC PRODUCT PACKING GLAND in one piece. High durability.

05 All **CONNECTIONS**, both hydraulic and pneumatic on the same side of the gun.

06 High durability **OPERATING PISTON** designed and tested for carrying out continuous jobs.

07 SINGLE SHAFT SYSTEM. Directly continuing Xtreme model series with a simplified design, synchronized performance in any kind of situation, fewer parts, and maintenance reduction.

08 FLUID FLOW REGULATOR. Great adjusting sensitivity. With vernier set to "0".

09 High precision progressive **FAN REGULATOR**.

10 QUICK CONNECTORS on the air and fluid inlets.

EXTERIOR AND INTERIOR ANTI CORROSIVE TREATMENT THROUGHOUT THE GUN

Application of all types of paints and sprayable products

- dyes
- metallized
- enamels
- primers
- coles
- adhesives
- abrasive products
- ceramics
- forged effect
- textured,...

100% compatibility V4000 vs. X4100 Aircaps, nozzles and needles

The V4000 automatic spray gun is 100% compatible with the range of fluid nozzles and air caps of the X4100 series, allowing to replicate the finishes of the automatic painting line with a manual spray gun and vice versa; giving the possibility of combining both systems (manual and automatic) in the same project.

Sagola V4000

Robot Version (QCR/DMR)

Automated fan size regulation. The manual regulation wheel is replaced by an air inlet.

Available in both standard version (DMR) and base version (QCR).

Base Version (QCM/QCR)

- Large ergonomic knob to ensure a quick and easy fixing of the gun to the base.
- Hold system with positioning fit.
- Fan regulator located in the base for a quick replacement of the gun keeping the setup parameters.
- Manufactured in accordance with the normative EN 1953:2013 Ap. 5.2.4.

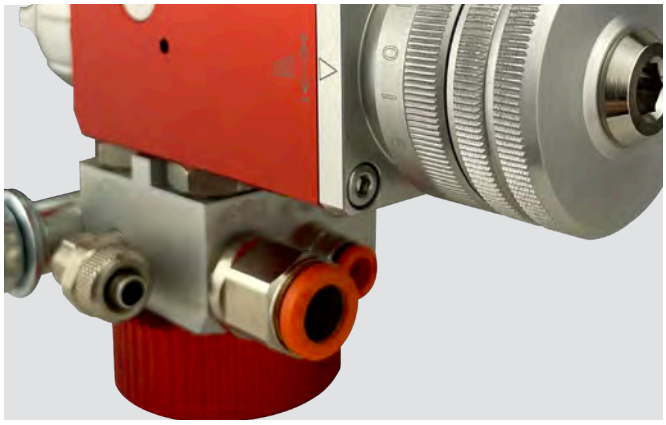

Connections

All inlets, both hydraulic and pneumatic, have been located on the same side of the gun or the base to facilitate the setup of the painting line.

(QCM/QCR version)

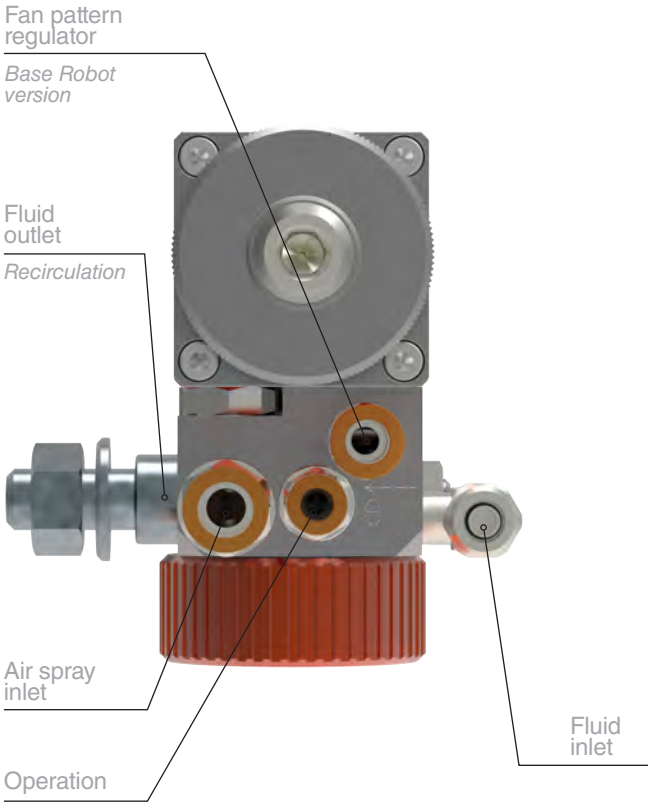

(DMM/DMR version)

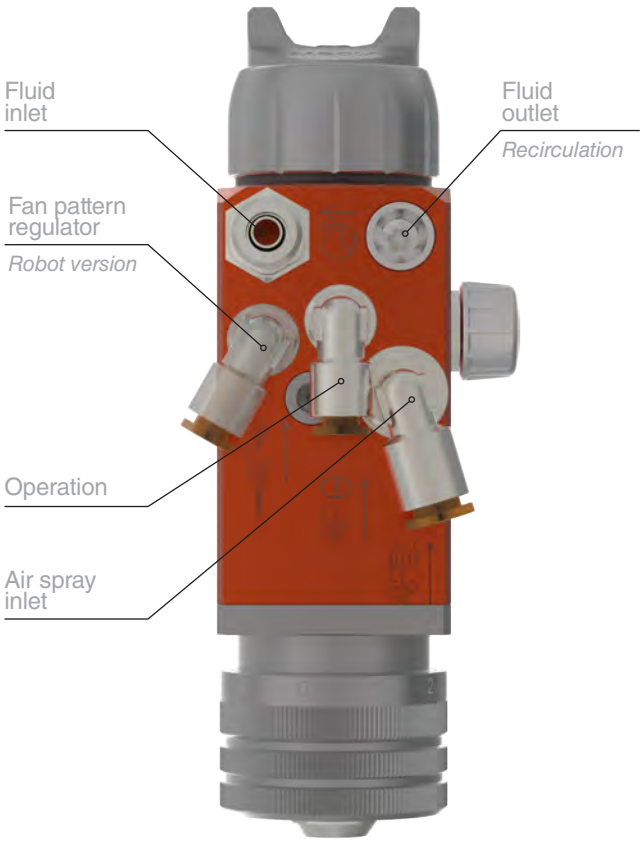

Sagola V4000

Aircaps technical data / Versions

HVLP PAINTED SYSTEM

Nozzle	Aircap	Air consumption at 2 bar	Application distance	DMM Code	DMR Code	QCM Code	QCR Code
1.00	XT03	460 L/min. (16.24 cfm)	12 - 15 cm. (4.72 - 5.9”)	10250917	-	10250966	-
1.20	XT03			10250918	-	10250967	-
1.40	XT03			10250939	-	10250989	-
1.60	XT03			10250933	-	10250982	-
1.20	3030	514 L/min. (18.15 cfm)		10250926	-	10250975	-
1.40	3030			10250927	-	10250976	-
1.60	3030			10250945	10251036	10250984	10251085
0.80	500	480 L/min. (16.95 cfm)	12 - 15 cm. (4.72 - 5.9”)	10250905	10251004	10250954	10251053
1.00	500			10250906	10251005	10250955	10251054
1.20	500			10250907 10250937	10251006 10251022	10250956 10250987	10251055 10251072
0.80	600	630 L/min. (22.25 cfm)	12 - 15 cm. (4.72 - 5.9”)	10250908	-	10250957	-
1.00	600			10250909	-	10250958	-
1.20	600			10250910	10251013 10251023	10250959	10251062 10251073
1.40	600			10250911 10250938	10251014 10251024	10250960 10250988	10251063 10251074
1.60	600			10250931	10251035	10250980	10251069

Nozzle and Needle in Stainless Steel *Nozzle and Needle in Tungsten Carbide*

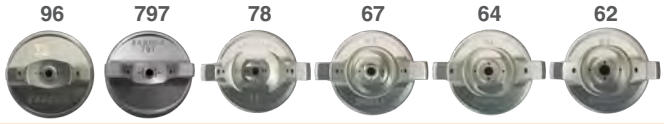

MEDIUM PRESSURE PAINTED SYSTEM

Nozzle	Aircap	Air consumption at 2 bar	Application distance	DMM Code	DMR Code	QCM Code	QCR Code
1.40	96	250 L/min. (8.83 cfm)	18 - 20 cm. (7 - 7.9”)	10250928	-	10250977	-
1.60	96			10250946	-	10250995	-
1.80	96			10250929	-	10250978	-
1.00	797	370 L/min. (13.07 cfm)	18 - 20 cm. (7 - 7.9”)	10250925	10251009	10250974	10251058
1.20	797			-	10251010	-	10251059
1.40	78	410 L/min. (14.48 cfm)	18 - 20 cm. (7 - 7.9”)	-	10251026	-	10251076
1.80	67	400 L/min. (14.13 cfm)		10250940	10251027	10250990	10251077
2.20	64	400 L/min. (14.13 cfm)		10250941	10251028	10250991	10251078
2.80	62	410 L/min. (14.48 cfm)		10250942	10251029	10250992	10251079

Nozzle and Needle in Stainless Steel *Nozzle and Needle in Tungsten Carbide*

Both the **fluid flow** and the **fan size** in the pressure guns are directly related to the product pressure set by the user, the viscosity of the fluid and the characteristics of the hose. Therefore, these values will vary depending on the setup used.

Sagola V4000

Aircaps technical data / Versions

MEDIUM PRESSURE PAINTED SYSTEM

Nozzle	Aircap	Air consumption at 2 bar	Application distance	DMM Code	DMR Code	QCM Code	QCR Code
1.00	777	345 L/min. (12.18 cfm)	18 - 20 cm. (7 - 7.9”)	10250916	-	10250965	-
0.80	765	315 L/min. (11.12 cfm)		10250901	10251001	10250950	10251050
1.00	765	315 L/min. (11.12 cfm)		10250902	10251002	10250951	10251051
1.20	765	315 L/min. (11.12 cfm)		10250903	10251020	10250952	10251070
1.40	765	315 L/min. (11.12 cfm)		10250904	10251003	10250953	10250952
1.60	765	315 L/min. (11.12 cfm)		10250930	10251017	10250979	10251066
1.20	20A	470 L/min. (16.6 cfm)		10250922	10251011	10250971	10251060
1.40	20A	470 L/min. (16.6 cfm)		10250923	10251012	10250972	10251061
1.60	20A	470 L/min. (16.6 cfm)		10250924	10251019	10250983	10251068
1.80	20A	470 L/min. (16.6 cfm)		10250924	-	10250973	-

Nozzle and Needle in Stainless Steel *Nozzle and Needle in Tungsten Carbide*

EPA PAINTED SYSTEM

Nozzle	Aircap	Air consumption at 2 bar	Application distance	DMM Code	DMR Code	QCM Code	QCR Code
0.80	XT01 B	295 L/min. (10.42 cfm)	18 - 20 cm. (7 - 7.9”)	10250912	10251007	10250961	10251056
1.00	XT01 B	295 L/min. (10.42 cfm)		10250913	-	10250962	-
1.20	XT01 B	295 L/min. (10.42 cfm)		10250914	10251025	10250963	10251075
1.40	XT01 B	295 L/min. (10.42 cfm)		10250915	10251008	10250964	10251057
1.60	XT01 B	295 L/min. (10.42 cfm)		10250932	10251018	10250981	10251067
1.00	Super VIT	380 L/min. (13.42 cfm)		10250919	-	10250968	-
1.20	Super VIT	380 L/min. (13.42 cfm)		10250920	-	10250969	-
1.40	Super VIT	380 L/min. (13.42 cfm)		10250921	-	10250970	-

Nozzle and Needle in Stainless Steel *Nozzle and Needle in Tungsten Carbide*

Both the **fluid flow** and the **fan size** in the pressure guns are directly related to the product pressure set by the user, the viscosity of the fluid and the characteristics of the hose. Therefore, these values will vary depending on the setup used.

Sagola V4000

Sagola V4000 Applications

Applications	Air cap	Recommended nozzle
FLUID PRODUCTS WOOD DYES TEXTILE, TANNED, TEFLON	765	1.00
	500 | 600 | XT03	0.80 - 1.00
	Super VIT | XT01	0.80 - 1.00
HS FINISHES, SINGLE STAGE, HS LACQUERS, PLASTIC INDUSTRY, WOOD AND INDUSTRIAL BODYSHOP	797 | 96	1.00 - 1.20
	XT03 | 500 | 600	1.00 - 1.20
	Super VIT | XT01	1.00 - 1.20
FINISHES ENAMELS WOOD VARNISHES METAL	765 | 96	1.20 - 1.40
	777	1.20
	XT03 | 500 | 600	1.00 - 1.20
	Super VIT | XT01	1.20
PRIMERS BACKGROUND PORE COVER WOOD AND METAL INDUSTRY	765	1.20 - 1.40
	XT03 | 600 | 3030	1.20 - 1.40
	Super VIT | XT01	1.20 - 1.40
ABRASIVE PRODUCTS CERAMIC ENAMELS VITRIFIABLE ENAMELS CERAMICS VITROCHRAMIC	78	1.40 C.T.
	67	1.80 C.T.
	64	2.20 C.T.
	62	2.80 C.T.
	500 | 600 | 3030	1.20 C.T. - 1.40 C.T.
	XT01	1.40 C.T.
COLES ADHESIVES	20A	1.40 - 1.80
	500 | 600 | 3030	1.40 - 1.60
	XT01	1.40 - 1.60

Sagola Mini V

Mini V, automatic spraygun of small dimensions and high precision. Ideal for painting small parts and machinery with reduced spaces.

Prepared for spraying solvent-based and water-based products.

Mini Xtreme top quality spray system. It is characterized by having very few maintenance parts, which makes it a very reliable piece of equipment that will not stop your production line.

Regulation system that will allow us to achieve the best finishes and the best performance in any type of application and with any type of product.

HVLP and EPA aircaps. High transfer.

REGULATIONS:

2006/42/CE
ATEX Ex II 2G x (Directive 2014/34/UE)
UNE-EN ISO 12100:2012,
EN1953:2013 and UNE 1127-1:2012
UNE EN-13463-1:2011

	Mini EPA	Mini HVLP	Mini TECH	Mini Aero Jet
Nozzle	Spray gun Code	Spray gun Code	Spray gun Code	Spray gun Code
0.30	10210218	10210217	-	-
0.50	10210216	10210208	-	10210221
0.60	-	-	10210219	-
0.80	10210215	10210201	-	-
1.00	10210209	10210202	10210220	-
1.20	10210210	10210203	-	-
1.30	10210211	10210204	-	-
1.40	10210212	10210205	-	-
1.60	10210213	10210206	-	-
1.80	10210214	10210207	-	-

Air consumption at 2 bar (29 psi):
Mini EPA aircap: 190 L/min. (6.71 cfm)
Mini HVLP aircap: 325 L/min. (11.48 cfm)
Mini TECH aircap: 52 L/min. (1.84 cfm)
Mini Aero Jet aircap: 150 L/min. (5.3 cfm)

Mini V Aero Jet version

Version with special aircap for high precision spray applications.
High production industries.
Low air consumption, 150 L/min. (5.3 cfm)

TECHNICAL DATA

	MINI V	
Weight	216 grams	0.48 lbs
Dimensions (without support)	11.6 X 4.8 X 5.8 cm.	4.6 x 1.9 x 2.3 “
Atomization air inlet connection	Ø 8 mm.	Ø 0.31 “
Pilot inlet connection	Ø 4 mm.	Ø 0.16 “
Product inlet connection	BSP 1/8” M (3.175 mm.) / Pipe connector (Ø 6 mm. - Ø 4 mm.)	
Recommended working pressure	2 - 5 bar (29 - 72.5 psi)	
Materials in contact with the product	Stainless steel, anodized aluminum, graphited Teflon, Nylon and nickel-plated brass	

Serie V (corrosives)

Serie V (corrosives)

Sagola's range of automatic spray guns for difficult products.

Stainless steel fluid nozzles to apply corrosive products.

Wide range of aircaps: Conventional, EPA and HVLP to cover all the needs of the industry. High level of finishes with a contained spray mist.

Special for jobs that require a high rate of opening and closing cycles. Suitable for use in any automatic painting line.

Metal Industry · Plastic Industry · Automobile Industry Ceramics · Furniture Industry · Textile · Tanned

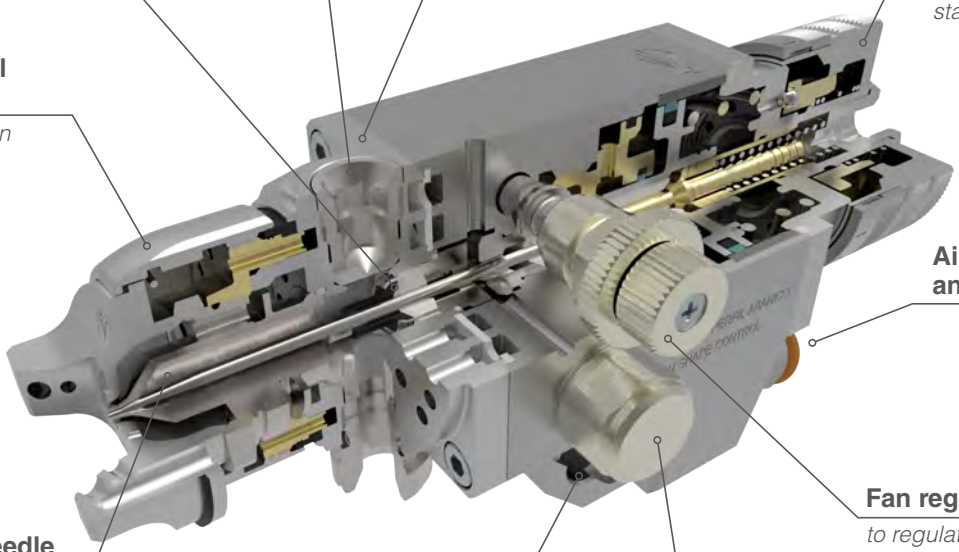

Circulating paint outlet

Detachable paint-head
and independent from the pneumatic zone, with four leak detection holes between them.

Automatic paint packing gland
without gaskets that require handling

Paint flow regulator with free dial
to be able to easily adjust all the line guns from the same starting point.

Stainless steel aircap nut
corrosives version

Air inlets for atomization and operation

Fan regulator
to regulate the size of the fan.

Nozzle and Needle made in Stainless steel
(see page 76)

Mooring and guidance systems
to assemble and disassemble the gun at your workplace always in the same position.

Fan control regulator
This regulator controls the quantity and distribution of air between the lugs and central holes.

Serie V / V4098 / Sagola V2 PD

Serie V (corrosives)

Spray gun version	Nozzle	Air cap	Spray gun Code
V4 Standard	0.80	765	10250812
	1.00	765	10250813
	1.00	777	10250814
	1.00	797	10250815
	1.20	20A	10250816
	1.20	797	10250819
	1.40	20A	10250820
	1.40	765	10250821
	2.80	62	10250824

Spray gun version	Nozzle	Air cap	Spray gun Code
V5 HVLP	0.80	500	10210408
	1.00	500	10210409
	1.20	500	10210410
	0.80	600	10210411
	1.00	600	10210412
	1.20	600	10210414
	1.80	600	10210415
V6 EPA	0.80	380	10280105
	1.40	380	10280108
	1.80	380	10280124

Sagola V4098

Anodized aluminum body. Spray gun designed for applying ceramic and abrasive products.

Metal-to-metal technology. No gaskets, O-rings, or plastic parts in the fluid zone.

Product opening and closing is achieved via a diaphragm system.

High-precision fan regulator.

Quick-connect couplings on the air inlets and diaphragm actuation.

ROBOT mode conversion kit

Code
56418773

Spray gun version	Nozzle	Air cap	Spray gun Code
V4098	1.40 T.C.	78	10250610
	1.40 T.C.	XT03	10250611
	1.80 T.C.	67	10250612
	2.20 T.C.	64	10250613

Spray gun version	Nozzle	Air cap	Spray gun Code
V4098	2.50 T.C.	64	10250614
	2.80 T.C.	62	10250615
	2.80 T.C.	63 C	10250616

Sagola V2 PD

Very high product transfer spray gun. Special for road marking painting machinery.

Internal mix aircap. 6 mm. nozzle.

Valid for high viscosity products.

Dimensions: 17.2 x 5.3 x 7.2 cm. (6.8 x 2.1 x 2.8 “)

Air consumption: 147 L/min.

Code
10259203

Spray gun accessories

ULTRA SOFT FLOW Air Valve

The new "ULTRA SOFT FLOW" is a servo-controlled air valve, patented and exclusive to SAGOLA, which reduces up to 65% the fatigue produced by pulling the trigger.

An unprecedented ergonomic innovation that represents a substantial improvement in the working conditions of the industrial painter.

The drastic reduction of the tightening force helps to prevent diseases derived from the activity itself such as tendinitis or lateral epicondylitis (tennis elbow). And it also supposes an optimization of the production processes by simplifying the painting processes: Better access to difficult areas, greater maneuverability, etc...

The new ULTRA SOFT FLOW air valve design, patented by Sagola, consists of a servo-assisted piston that presses the fluid needle spring, reducing the force applied to the trigger by more than half.

Available for the pressure versions of the Mini Xtreme and the X4100 Series. Can be purchased as a kit to upgrade guns of these models with standard valve.

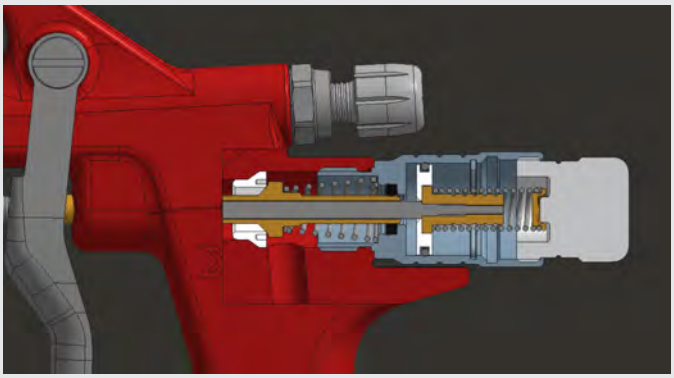

Version	Code
X4100 Ultra Soft Flow air valve	56418684
Mini Xtreme Ultra Soft Flow air valve	56418697

Spray gun accessories

Digital

RC3 Flow regulator with pressure gauge

Digital air pressure reading for the gun. Version in bar and psi. High-quality, highly accurate, sealed pressure gauge.

Version	Code
bar	40000345
psi	40000346

RC1 Flow regulator with pressure gauge

Aluminium, very light. Ideal for high transfer HVLP and EPA spray guns. Red to green pressure scale (green within provisions of regulations). Assembled in seconds with hermetic hand tightening.

Code
56418020

High precision flow regulator

High precision air-flow regulator kit. Solvent-proof gaskets. Suitable for SAGOLA 4600 digital. Recommended for finishing spray guns.

Code
56418519

RC2 Flow regulator with pressure gauge

Pressure gauge flow regulator. Exact input pressure gun.High quality gauge green scale for high transfer guns.

Code
40000335

Pressurizer kit

For gravity spray guns. Gravity cup pressure kit for high viscosity materials spraying. Non-return valve included.

Code
56418513

4600 HVLP Tester

Pressure checker for HVLP aircaps (SAGOLA 4600 spray gun model).

Code
10010051

SP2 and SP1 Magnetic Stands

Magnetic stand for 1 (SP1) or 2 (SP2) spray guns. Solvent-proof paint. Supports PPS type adapters. Maximum robustness. High holding power due to two powerful magnets.

Version	Code
SP 1	40000245
SP 2	40000246

UV Protective Cap

Protective cap kits for Sagola spray guns and opaque containers for ultraviolet products.

Version	Code
Cap + 650 ml. cup 3300 GTO / 3600 XPT	56418786
Cap + 650 ml. cup 4600 DFT / 4600 HEX	56418787
Cap + 650 ml. cup 3400 Compact / Mini	56418788
Cap + 125 ml. cup 3400 Compact / Mini	56418789

Cleaning kit

Complete cleaning set, including one brush for outside cleaning, and rods of different sizes for all the inner paths of the spray gun. Supplied in a practical show case.

Code
40000086

Lubricant grease

Natural grease, specially made for spray guns and painting equipments moving parts lubrication. High consistency, even under extreme temperatures. Long lasting, it doesn't lose properties over the time.

Code
56418589

Ford 4 - Viscosimeter

Viscosity dip cup, made of polyamide (solvent resistant) with metal outlet hole (brass).

Code
56418001

Spray gun accessories

GRAVITY AND SUCTION CUPS

Description	Spray gun model	Code
650 ml. Gravity cup	X 4100 SERIES 3300 GTO 3400 Compact CLASSIC PRO XD	56418084
650 ml. Gravity cup (without product filter)		56418085
1.000 ml. Gravity cup (metallic)		56418082
650 ml. Gravity cup	CLASSIC LUX	56418420
125 ml. Gravity cup	3400 Compact Mini Xtreme 475 XTECH	56418081
125 ml. Black Gravity cup		56418099
200 ml. Gravity cup		56418079
500 ml. Gravity cup	3400 COMPACT / Mini	56418080
1.000 ml. Suction deposit	X 4100 / 3300 / PRO XD	56418074

PRODUCT FILTERS AND SEALING JOINTS

Description	Spray gun model	Code
Gravity deposit product filter 650 ml. (10 units)	X 4100 / 3300 / PRO XD	56418017
Gravity deposit product filter 500 ml. (10 units)	3400 COMPACT Mini Xtreme	56418059
Gravity deposit product filter 125 ml. (6 units)		56418061
Suction deposit product filter 1,000 ml. (10 units)	X 4100 / 3300 / PRO XD	56418014
Suction deposit anti-drip lid 1,000 ml. (5 units)	X 4100 / 3300 / PRO XD	56418013
Suction deposit closure washer (5 units)	X 4100 / 3300 / PRO XD	56418509

ADAPTATION COUPLINGS FOR DISPOSABLE PPS CUPS

Description	Spray gun model	Code
3M PPS Adaptation coupling	3400 COMPACT Mini Xtreme 3300 GTO X 4100 PRO XD	55711612
3M PPS 2.0 Adaptation coupling		55711627
MIPA / CARWOX Adaptation coupling		55711616
GERSON / NORTON Adaptation coupling		55711614
FLEXI CUP Adaptation coupling		55711615
DEVILBISS / DEKUPS Adaptation coupling		55711618
SATA RPS Adaptation coupling		55711620
COLAD Adaptation coupling		55711623

AIR VALVES AND PACKING GLANDS

Description	Spray gun model	Code
Air valve Kit	3400 COMPACT / MINI	56418644
Air valve Kit (Soft Flow)	X 4100 / 3300	56418669
Air valve Kit	3300	56418664
Air valve Kit	PRO XD	56418481
Paint Packing nut	X 4100	56411616
Paint Packing Kit	3400 COMPACT / MINI	56418034
Paint Packing nut	3300	57212211
Paint Packing Kit	PRO XD	56411619

Spray gun accessories

Extensions

Accessory for Sagola industrial spray guns.
Perfect tool for jobs that are difficult to access.
Lengths of 150, 300 and 500 mm.
Great variety of nozzles.

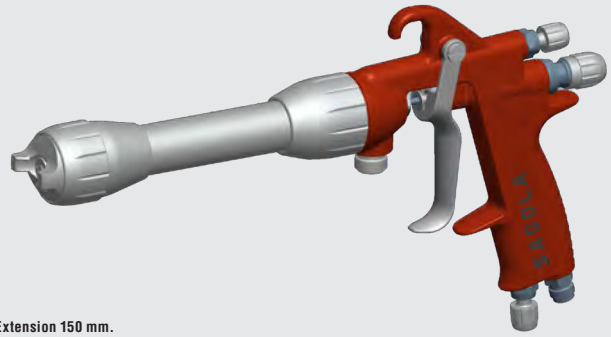

EXTENSIONS FOR X4100 SERIES

Description	Length	Nozzle	Code
Extension for X4100 Series	150 mm.	1.00	52411737
		1.20	52411738
		1.40	52411739
Extension for X4100 Series	300 mm.	1.00	52411740
		1.20	52411741
		1.40	52411742
		1.60	52411745
Extension for X4100 Series	500 mm.	1.20	52411743
		1.80	52411744

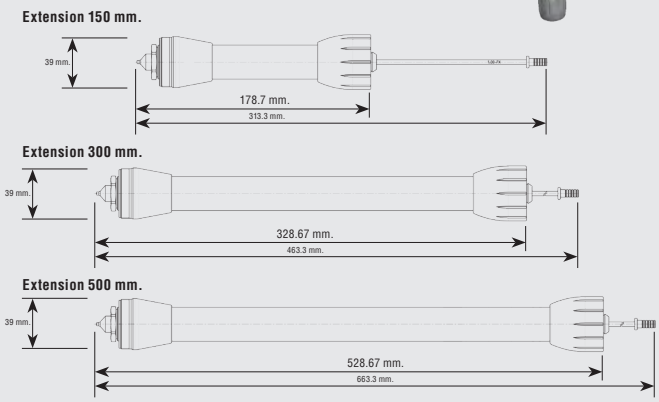

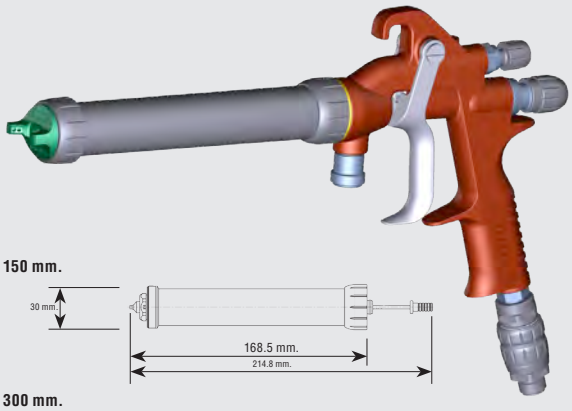

EXTENSIONS FOR MINI XTREME

Description	Length	Nozzle	Code
Extension for Mini Xtreme	150 mm.	0.80	52411713
		1.00	52411714
		1.20	52411715
		1.40	52411716
Extension for Mini Xtreme	300 mm.	0.80	52411717
		1.00	52411718
		1.20	52411719
		1.40	52411720
Extension for Mini Xtreme	500 mm.	1.20	52411702
		1.80	52411706

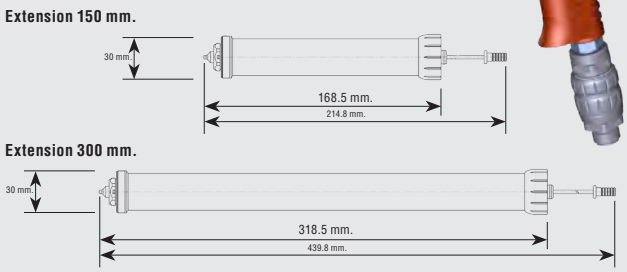

EXTENSIONS FOR MINI V

Description	Length	Nozzle	Code
Extension for Mini V	300 mm.	1.20	52411730
		1.30	52411731

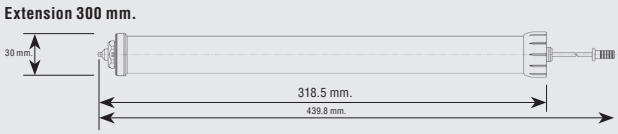

Lateral air jet nozzles

X4100 seires

Code
56418321

Mini V

Code
56411117

Air caps

The **aircap model** is vital to achieve the desired results. The type of product we are going to apply and the application system we are going to use must both be taken into account when selecting an aircap. We will obtain the desired spray by correctly combining the aircap with the correct nozzle and needle kit, and a proper air supply.

High transfer air caps

AIR CAP	Spraygun model	Painting System	Recommended application	Nozzle (mm.)	Air consumption	Code
XT01	X 4100 SERIES Gravity/Suction	EPA	High quality finishes and primers. (HVLP compliant)	0.8 - 1.8	235 L/min. / 8.30 cfm	56418565
XT01 B	X 4100 SERIES Pressure	EPA	High-quality finishes and primers without giving up a transfer rate of more than 65%	0.8 - 1.8	295 L/min. / 10.42 cfm	56418564
SUPER VIT		EPA	High-quality finishes and primers without giving up a transfer rate of more than 65%	0.8 - 1.8	380 L/min. / 13.42 cfm	56418702
3030		HVLP	Finishes and primers. Minimum mist. 0.68 bar (10 psi) at nozzle	0.8 - 1.8	514 L/min. / 18.15 cfm	56418572
XT03	X 4100 SERIES Gravity/Suction	HVLP	Minimum mist. Maximum quality of atomization. 0.68 bar (10 psi) at nozzle	0.8 - 2.5	465 L/min. / 16.42 cfm	56418566
MINI VIT	Mini XTREME Pressure	EPA	High speed of application. Large fan size	0.8 - 1.8	350 L/min. / 13.42 cfm	56418560
Compact CLEAR	3400 Compact Gravity	EPA	Finishes. Maximum spray quality. Great product savings	0.8 - 1.8	200 L/min. / 10.42 cfm	56418525
Compact HVLP	Mini XTREME Pressure	HVLP	Maximum transfer. Great product savings with low air consumption.	0.8 - 1.8	310 L/min. / 18.15 cfm	56418526
Compact BASE	3400 Compact Gravity	EPA	Special Spot repair. UV primers. Painted parts. Basecoats, varnishes and waterborne products	0.8 - 1.8	190 L/min. / 6.71 cfm	56418524
Compact TECH		EPA	Low viscosity products and feathering. Lines painting	0.6 - 1.0	52 L/min. / 11.12 cfm	56418598
GTO EPA	3300 GTO	EPA	Finishes and primers	1.0 - 1.8	250 L/min. / 8.8 cfm	56418645
GTO EVO		EPA	High quality finishes. High gloss, matt colors	1.0 - 1.6	255 L/min. / 9.01 cfm	56418558
GTO HVLP		HVLP	Primers. Minimum mist and max. savings. 0.68 bar (10 psi) at nozzle	1.0 - 2.0	360 L/min. / 12.71 cfm	56418552
GTO 64 S		EPA	Varnishes and water-based enamels. Forge effect. High microns. Glues and adhesives.	2.2 - 2.5	310 L/min. / 10.95 cfm	56418646
GTO 62 S		EPA	High viscosity. Gun polyester, forged effect, ceramic enamels	2.8	270 L/min. / 9.53 cfm	56418647
CLASSIC 21 EPA	CLASSIC PRO XD	EPA	Primers. Big fan	1.4 - 1.8	225 L/min. / 7.95 cfm	56418639
CLASSIC HVLP		HVLP	Primers and fillers. Min. mist and max. savings 0.68 bar (10 psi) at nozzle	1.4 - 1.8	355 L/min. / 11.54 cfm	56418643

Air caps

Medium pressure air caps

AIR CAP	Spraygun model	Painting System	Recommended application	Nozzle (mm.)	Air consumption	Code
96	X 4100 SERIES Gravity Suction	Medium pressure	High quality finishes. Primers. Great versatility	0.8 - 1.8	250 L/min. 8.83 cfm	56418573
64S		Medium pressure	Varnishes and water-based enamels. High microns. Glues and adhesives	2.0 - 2.5	305 L/min. 10.77 cfm	56418575
62S	X 4100 SERIES Gravity	Medium pressure	Forge effect. High viscosity. Gun polyester. ceramic enamels	2.8	340 L/min. 12 cfm	56418574
765	X 4100 SERIES Pressure	Medium pressure	High quality finishes. Primers	0.8 - 1.8	315 L/min. 11.12 cfm	56418571
777		Medium pressure	High gloss finishes. Basecoats. High atomizing power	0.8 - 1.4	345 L/min. 12.18 cfm	56418576
67		Medium pressure	Ceramic products. Silicates. Abrasive products	1.8 C. Tungsteno	400 L/min. 14.13 cfm	56418568
64		Medium pressure	High microns	2.0 - 2.5	390 L/min. 13.77 cfm	56418570
62		Medium pressure	High viscosity products	2.8	410 L/min. 14.48 cfm	56418567
20		Medium pressure	Glues and adhesives	1.2 - 1.8	430 L/min. 15.19 cfm	56418569
25	CLASSIC PRO XD	Medium pressure	Primers. High thickness	2.0	155 L/min. 5.47 cfm	56418640
36		Medium pressure	Intermediate layers. High thickness	2.5	205 L/min. 7.24 cfm	56418642
28		Medium pressure	High viscosity. Gun putties. Forged effect	2.8	240 L/min. 8.48 cfm	56418641
05	475 XTECH	Medium pressure	Feathering	0.5 - 0.8	100 L/min. 3.53 cfm	56418246
10		Medium pressure	Retouching. Painted parts	1.0	110 L/min. 3.88 cfm	56418247
R5		Medium pressure	High precision round jet. Feathering and fine lettering	0.5	45 L/min. 1.59 cfm	56418271

Automatic guns air caps

AIRCAP	Spraygun model	Painting system	Code
765	V 4000 Automatic gun	Medium pressure	56418157
777		Medium pressure	56418158
797		Medium pressure	56418159
20 A		Medium pressure	56418156
96		Medium pressure	56418726
Super VIT		EPA	56418725
XT01 B		EPA	56418729
380		EPA	56418229
63 C	V4098	Medium pressure	56418659

AIRCAP	Spraygun model	Painting system	Code
XT03	V 4000 Automatic gun	HVLP	56418727
3030		HVLP	56418207
500		HVLP	56418231
600		HVLP	56418161
78		Medium pressure	56418734
67		Medium pressure	56418731
64		Medium pressure	56418732
62		Medium pressure	56418733
Mini HVLP	Mini V	HVLP	56418507
Mini EPA		EPA	56418512
Mini TECH		EPA	56418707
Mini AEROJET		EPA	56418724

Nozzle and needle kits

Nozzle and needle kits

Spray gun	Code	Description
41 range X 4100 Series Gravity Pressure Suction	10011251	0.80 Nozzle and needle kit
	10011252	1.00 Nozzle and needle kit
	10011253	1.20 Nozzle and needle kit
	10011121	1.30 Nozzle and needle kit
	10011122	1.40 Nozzle and needle kit
	10011123	1.60 Nozzle and needle kit
	10011124	1.80 Nozzle and needle kit
	10011125	2.00 Nozzle and needle kit
	10011126	2.20 Nozzle and needle kit
	10011127	2.50 Nozzle and needle kit
	10011128	2.80 Nozzle and needle kit
3400/Mini range 3400 Compact Mini Xtreme Pressure	10011200	0.80 Nozzle and needle kit
	10011201	1.00 Nozzle and needle kit
	10011202	1.20 Nozzle and needle kit
	10011203	1.30 Nozzle and needle kit
	10011204	1.40 Nozzle and needle kit
	10011205	1.60 Nozzle and needle kit
	10011206	1.80 Nozzle and needle kit
3300 range 3300 GTO Classic Pro Suction	10011187	1.00 Nozzle and needle kit
	10011180	1.20 Nozzle and needle kit
	10011191	1.30 Nozzle and needle kit
	10011181	1.40 Nozzle and needle kit
	10011182	1.60 Nozzle and needle kit
	10011183	1.80 Nozzle and needle kit
	10011188	2.00 Nozzle and needle kit
	10011192	2.20 Nozzle and needle kit
	10011189	2.50 Nozzle and needle kit
	10011190	2.80 Nozzle and needle kit
Classic range Classic Pro XD Gravity	10011254	1.40 Nozzle and needle kit
	10011255	1.60 Nozzle and needle kit
	10011256	1.80 Nozzle and needle kit
	10011257	2.00 Nozzle and needle kit
	10011258	2.20 Nozzle and needle kit
	10011259	2.50 Nozzle and needle kit
	10011260	2.80 Nozzle and needle kit
475 range 475 XTech	10011198	1.00 Nozzle and needle kit
	10011197	0.80 Nozzle and needle kit
	10011195	0.50 Nozzle and needle kit
	10011196	0.50 CHR Nozzle and needle kit

Spray gun	Code	Description
V range V 4000 V 4000 V4 V5 V6	56418150	0.80 Nozzle and needle kit
	56418151	1.00 Nozzle and needle kit
	56418152	1.20 Nozzle and needle kit
	56418153	1.40 Nozzle and needle kit
	56418154	1.80 Nozzle and needle kit
	56418101	1.20 C.T. Nozzle and needle kit
	56418102	1.40 C.T. Nozzle and needle kit
	56418103	1.80 C.T. Nozzle and needle kit
	56418104	2.20 C.T. Nozzle and needle kit
	56418105	2.80 C.T. Nozzle and needle kit
Mini V range	10011218	0.30 Nozzle and needle kit
	10011247	0.50 Nozzle and needle kit
	10011240	0.80 Nozzle and needle kit
	10011241	1.00 Nozzle and needle kit
	10011242	1.20 Nozzle and needle kit
	10011243	1.30 Nozzle and needle kit
	10011244	1.40 Nozzle and needle kit
	10011245	1.60 Nozzle and needle kit
	10011246	1.80 Nozzle and needle kit
	10011219	0.50 Aerojet Nozzle and needle kit
	10011248	0.60 CHR Nozzle and needle kit
	10011249	1.00 CHR Nozzle and needle kit
V4098 range	56414520	1.20 T.C. Nozzle Kit
	56414521	1.30 T.C. Nozzle Kit
	56414522	1.50 T.C. Nozzle Kit
	56414523	1.80 T.C. Nozzle Kit
	56414527	2.00 T.C. Nozzle Kit
	56414524	2.20 T.C. Nozzle Kit
	56414525	2.50 T.C. Nozzle Kit
	56414526	2.80 T.C. Nozzle Kit

Nozzle and needle kits Anti-gravel gun *(Page 160)*

518 Pro	10011199	2.00 Nozzle and needle kit

Nozzle and needle kits • Hardware & Decoration

Spray gun	Code	Description
Lux range Classic Lux Gravity	10011380	1.40 Nozzle and needle kit + 40 air cap
	10011370	1.60 Nozzle and needle kit + 40 air cap
	10011371	1.80 Nozzle and needle kit + 40 air cap
	10011372	2.00 Nozzle and needle kit + 41 air cap
	10011373	2.50 Nozzle and needle kit + 42 air cap
Classic Lux Suction	10011374	1.60 Nozzle and needle kit + 38 air cap
	10011375	1.80 Nozzle and needle kit + 39 air cap
474	10011376	0.80 Nozzle and needle kit
	10011377	1.00 Nozzle and needle kit
Junior G	49000431	1.40 Nozzle and needle kit
	49000432	1.60 Nozzle and needle kit
	49000433	1.80 Nozzle and needle kit

Accessories for pumps and pots

At Sagola we have a complete range of accessories for jobs with Sagola low-pressure painting equipment. Deposits, hoses, filters, regulators and accessories to ensure maximum performance.

Anti-pulsation filter

60 and 100 mesh filters for DM double membrane pumps.

Code	Description
56413507	DM 1/300 Antipulsation Filter Kit
83660053	DM 1/400 Antipulsation Filter Kit
83660030	Antipulsation filter 60 meshes
83660029	Antipulsation filter 100 meshes

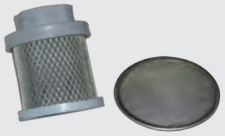

Absorption probe

for DM pumps.

Code	Description
86465206	Absorption probe
83660047	Narrow pass absorption filter
56418055	Round filter 40 meshes

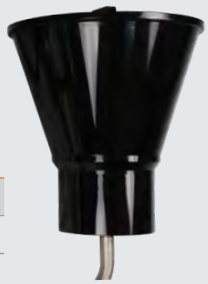

Gravity deposit

5 L. capacity for DM pumps.

Code	Description
30090091	5L Gravity deposit

Air and product hose

Antistatic air hose 8 x 15 mm. and product hose 6 x 8 mm. with Nylon cover. Light and resistant hose.
(Description page 141)

Code	Description
56414130	1.8 m. Air hose + product hose + cover
56414039	5 m. Air hose + product hose + cover
56414044	7.5 m. Air hose + product hose + cover
56414040	10 m. Air hose + product hose + cover
56414041	15 m. Air hose + product hose + cover
56414042	20 m. Air hose + product hose + cover

Product regulator

Low pressure product regulator for DM double membrane pumps.

Code	Description
52410019	DM pumps product regulator

Other accessories

for DM pumps.

Code	Description
49000478	DM 1/300 Membrane kit
30090017	DM 1/400 Membrane kit
49000479	Distribution group gasket kit DM 1/300
30090018	Distribution group gasket kit DM 1/400
30090019	DM 1/400 Pneumatic distributor kit
30090020	DM 1/400 Product valve kit

Interchangeable tanks

Interchangeable tanks for easy cleaning of the pots.

Code	Description
52411607	10 L Interchangeable tank - 6110 INOX
52411608	25 L Interchangeable tank - 652 INOX
52411609	50 L Interchangeable tank - 653 INOX

Disposable tanks

Single-use disposable tanks for the 6110 Inox pressure pot.

Code	Description	Units
52411616	Disposable tanks - 6110 INOX	10

02

Mixed system

The mixed painting system combines the speed of airless spraying with the high quality finish of the airbrush system.

Sagola offers an exclusive product for professional use with a high level of demand both in terms of performance and image.

Mack, Raider and bellows lines (HTV and HT).
A decided commitment to technique and durability aimed at guaranteeing exceptional performance in the harshest conditions of use.

Sagola X3500 Mix / X4500 Mix

Applications:
Varnishes, lacquers, enamels, primers, solvent-based or water-based products, 1k and 2k solvent-based or water-based finishes, and polyurethanes

The excellence of the industrial finish

Designed to last thanks to their robust construction and the quality of their components. Added to this is their ease of use and smooth operation, making them the ideal combination spray gun for demanding jobs.

TECHNICAL DATA	SAGOLA X3500 MIX		SAGOLA X4500 MIX	
Weight	510 grams	1.1 lbs	602.5 grams	1.32 lbs
Weight (with swivel coupling)	550 grams	1.98 lbs	642.5 grams	1.41 lbs
Dimensions	16.1 x 18 cm.	6.3 x 7.1 “	16.2 x 17.8 cm.	6.3 x 7 “
Dimensions (with swivel coupling)	16.1 x 20.1 cm.	6.3 x 7.9 “	16.2 x 19.9 cm.	6.3 x 7.8 “
Width of handle	3.2 cm.	1.3 “	4.2 cm.	1.6 “
Air inlet connection	Quick connector 8 mm. / M16			
Product inlet connection	BSP 1/4” M (with or without swivel coupling)			
Deposit	Product inlet via pressure pot or pneumatic pump			
Product filter	60/100 mesh			
Recommended working pressure	2 bar (29 psi)			
Average sound pressure level	80 dB			
Materials in contact with the product	Brass, Stainless Steel, Tungsten Carbide, PTFE, Polyamide, FKM			

Sagola X3500 Mix / X4500 Mix

Spray gun main news

ANTICORROSIVE TREATMENT
OUTSIDE AND INSIDE

01 BODY in forged and anodized aluminium, highly resistant and light. High corrosion protection.

02 NEEDLE made of stainless steel. High resistance.

03 High durability **AUTOMATIC PRODUCT PACKING GLAND**. One piece. Stainless steel body in quick change format. It avoids manipulation and breakage of the glands and makes it easier to remove for thorough cleaning of the paint area. Unique in the market. Patented system P073000321.5.

04 MIXED TIP with body made of stainless steel. Highly resistant and light (corrosion free).

05 NOZZLE AND NEEDLE CLOSURES. Manufactured in Tungsten Carbide. High durability. Disassembly of the needle without the need for tools.

06 TRIGGER. 100% made of stainless steel. Smooth action with an ultra-ergonomic design. Reduces fatigue.

07 SWIVEL FILTER HOLDER. Facilitates access to difficult areas and reduces fatigue during continuous painting sessions.

08 PRODUCT TUBE for hose alignment. Made of stainless steel

09 MAXIMUM PRESSURE 200 BAR. With **YELLOW** spring, pressure of 120 Bar. With **RED** spring, pressure of 120 Bar.

10 "SOFT FLOW" air valve. Trigger smoothness even at high air pressure levels. No pressure drops between the 1st and 2nd trigger stage. Save paint regulating the air pressure with the trigger partially pulled (1st stage).

11 SWIVEL QUICK CONNECTOR. Together with the swivel product connector, it offers the Mini XTREME Mix total freedom of movement.

12 High precision **FAN REGULATOR**. We get total control of the fan size.

13 SAFETY SYSTEM. Easy gun locking system.

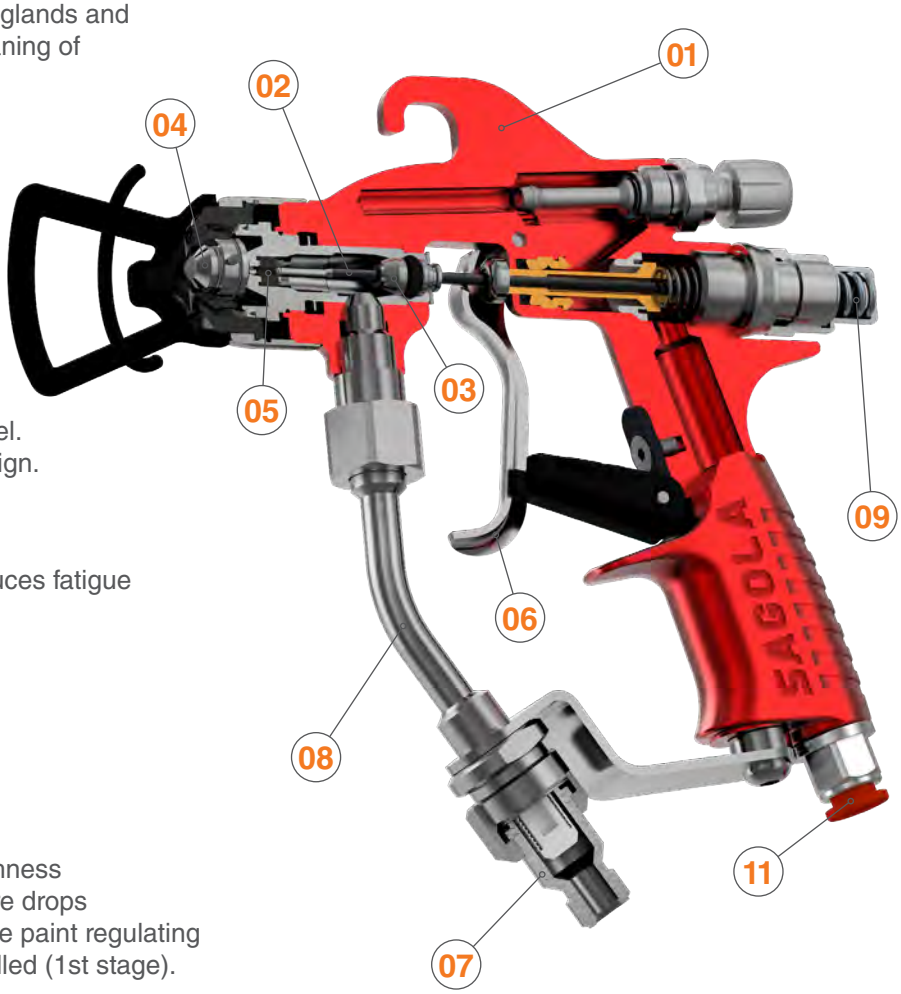

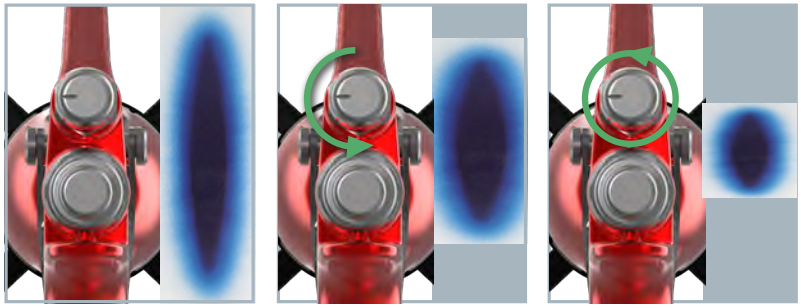

Sagola X3500 Mix / X4500 Mix

SAGOLA presents its new generation of high-performance hybrid spray guns for the most demanding industrial environments. Power, precision and control come together in the new X3500 and X4500 Mix models, designed to deliver maximum transfer efficiency and superior atomisation, even with high-viscosity materials.

A robust and contemporary aesthetic is combined with an optimised ergonomic design, achieving the perfect balance between strength and handling. Their carefully engineered weight distribution, together with high-precision machining, ensures comfort during long working sessions and a stable, uniform and professional application.

Power and superior atomisation

Hybrid technology combines fluid pressure and air assistance to achieve fine atomisation even with high-viscosity materials. Greater transfer efficiency, uniform application and high-quality finishes in demanding industrial environments.

Robustness and industrial reliability

Built with high-strength materials and precision machining, the X3500 and X4500 Mix models are designed to withstand long working hours and extreme conditions, ensuring consistent performance and extended service life.

Control and stability in every pass

Their balanced ergonomic design and optimal weight distribution provide comfortable and safe handling. The applicator achieves a consistent and stable spray pattern, reducing fatigue, overspray and rework.

Easy maintenance and maximum durability

Designed with metal-to-metal contact in critical fluid areas, eliminating unnecessary seals in the application zone. Easy disassembly, quick cleaning and reduced component wear to minimise downtime.

Sagola XMix Guns versions

Versions WITH swivel coupling

Mixed air cap TIP	Air inlet connection	Product inlet connection	X3500 MIX Code	X4500 MIX Code
11/40	8 mm. Quick coupling	Swivel coupling BSP 1/4” M	35130211	35130701
11/40	Raccord M16	Swivel coupling BSP 1/4” M	35130213	35130703
13/40	8 mm. Quick coupling	Swivel coupling BSP 1/4” M	35130215	35130705
13/40	Raccord M16	Swivel coupling BSP 1/4” M	35130217	35130707

Versions WITHOUT swivel coupling

Mixed air cap TIP	Air inlet connection	Product inlet connection	X3500 MIX Code	X4500 MIX Code
11/40	8 mm. Quick coupling	BSP 1/4” M	35130210	35130702
11/40	Raccord M16	BSP 1/4” M	35130212	35130704
13/40	8 mm. Quick coupling	BSP 1/4” M	35130214	35130706
13/40	Raccord M16	BSP 1/4” M	35130216	35130708

Automatic Sagola V7 mix

Gun with mixed painting system. High product pressure (30 - 150 bar). High production and low contamination. Product closure in Tungsten Carbide.

High speed of application.

For jobs that require a high rate of opening and closing cycles. Optimal to install in robots and special machines.

Valid for jobs where it is necessary to reduce mist and improve working conditions. To achieve a drastic reduction in material consumption.

Spraying of lacquers, varnishes, ultraviolet paints, etc.

Body

Forged and anodized aluminum body of high resistance and great durability. Extremely robust elements.

High resistance

Elements made of Tungsten Carbide, such as the nozzle and needle closures. Anti-corrosion treatment throughout the gun.

Product savings

Reduction of mist and material consumption while maintaining a level of finish of the highest level thanks to the design of its air nozzle.

Advantages

Product inlet filter, adjustable air inlet couplings, double fan regulator, cleaning and maintenance accessories.

TECHNICAL DATA

	SAGOLA V 7 MIX	
Weight	945 g.	2.08 lbs
Dimensions	16.9 x 6 x 12 cm.	6.7 x 2.4 x 4.7 ”
Air inlet connector	Quick coupling hose Ø 8 mm.	
Air inlet connector (pilot)	Quick coupling hose Ø 6 mm.	
Product input connector	BSP 1/4” M	
Air consumption	150 L/min	33 gpm (39.6 US gpm)
Maximum air pressure	8 bar	116 psi
Product pressure	150 bar	2,175 psi
Recommended working pressure range	30 - 150 bar	435 - 2,175 psi
Minimum operating pressure	8 bar	116 psi
Materials in contact with the product	Stainless Steel, Tungsten Carbide, Teflon, anodized aluminum, brass and Nylon	

VERSIONS

Description	Version	Code
V7 mix automatic gun	Standard	**35230101**
V7 mix automatic gun	Robot	**35230102**

REGULATIONS:

2006/42/CE
ATEX Ex II 2G x (Directive 2014/34/UE)
UNE-EN ISO 12100:2012,
EN1953:2013 and UNE 1127-1:2012
UNE EN-13463-1:2011

Installation of V7 mix automatic guns in robot version

Mixed pneumatic equipment

Maximum production

This line, exclusively designed and manufactured for professional use, gathers high standards both in term of performance and image.

Within the quality standards we focus on simplicity and durability.

Thus, we have redesigned completely the hydraulics. Now it contributes to a long-lasting life even in the worst working conditions and without waiving on its performance.

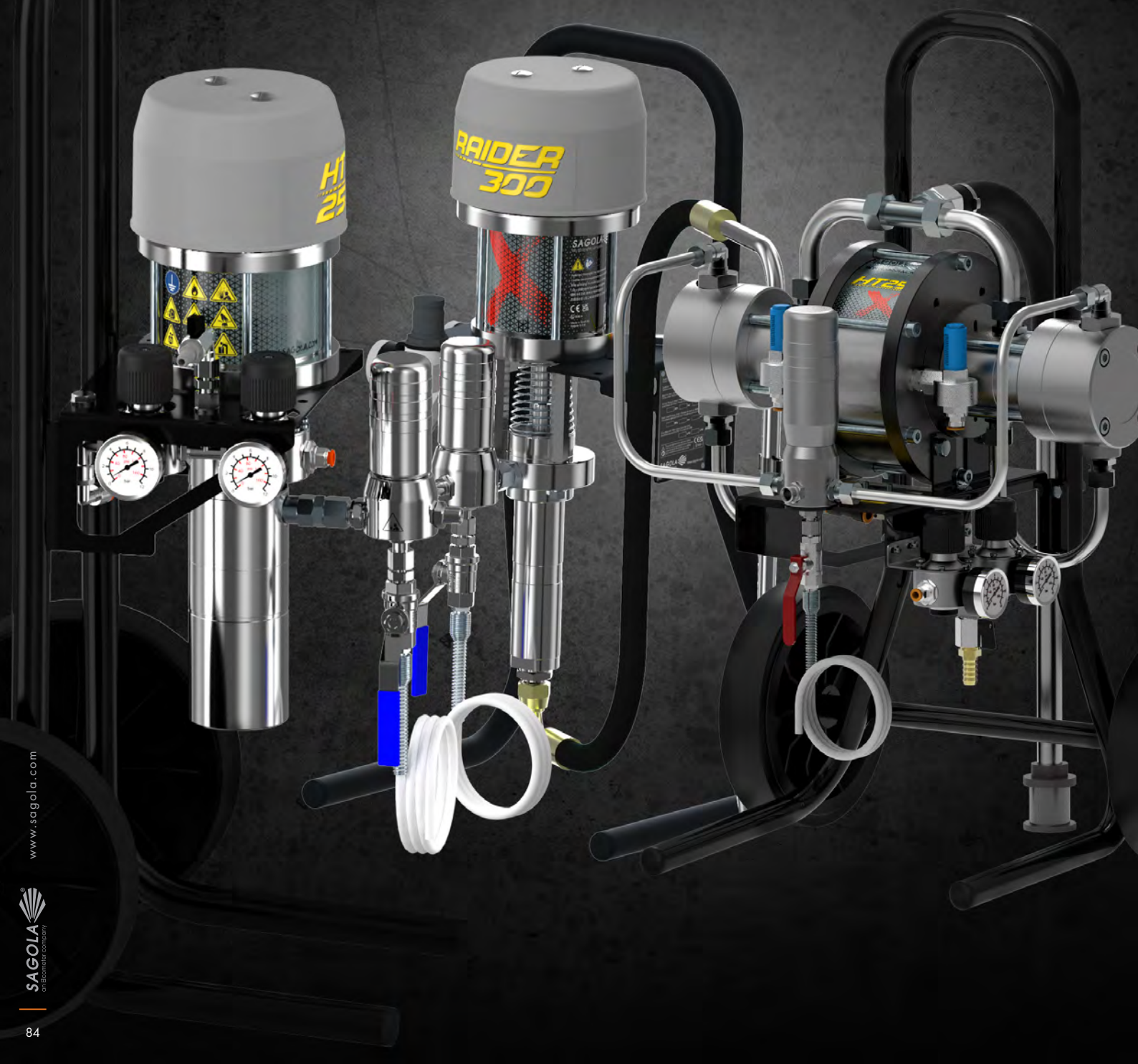

Mixed pneumatic equipment

Main news mixed equipment

01 PNEUMATIC BODY made of aluminum. Machined and anodized. High resistance to corrosion.

02 AIR DISTRIBUTION AREA
To avoid freezing problems and maintain a smooth functionation without any loss of performance.

03 PNEUMATIC AREA SHAFT.
Rectified and chromed shafts.

04 PRODUCT AREA SHAFTS.
Hardened and chrome-plated shafts.
Great durability and wearing resistance.

05 ALL PACKINGS have been REDESIGNED.
They offer great durability and smooth-functioning, even working at low pressure.

06 VALVES.
Oversized valve design. They give us a better flow of material, a reduction in speed of passage of product and consequently less wear.

07 PRODUCT INPUT.

08 PRODUCT OUTLET.

09 COMPACT DESIGN.
Robust and high quality. A simplified design, with fewer parts and easier maintenance and repair.

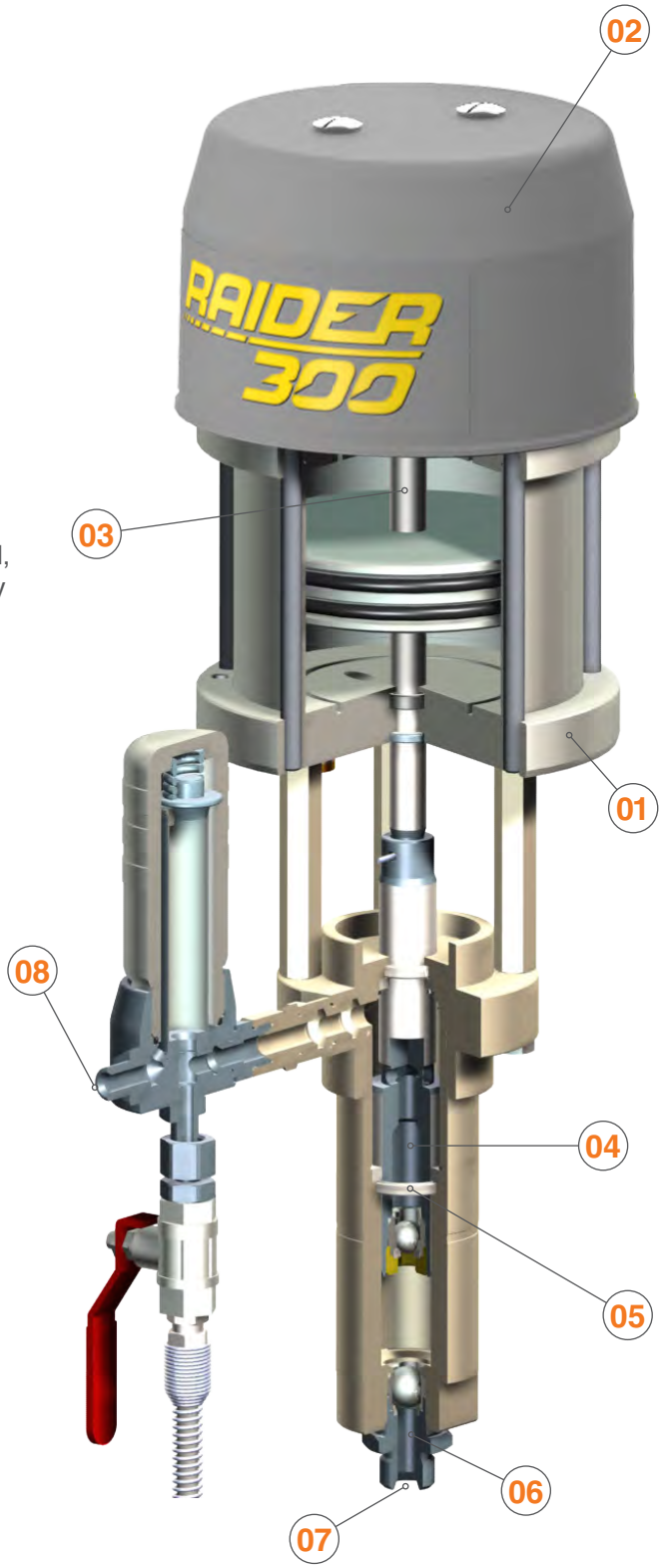

Sagola RAIDER 300 Mix X

Professional pneumatic equipment for painting with a mixed painting system. High production.

RAIDER professional line, designed and manufactured with the needs of small and medium metal and wood industries in mind.

Easy to use and low maintenance. High robustness. A bet for the technique and the durability. Very low air consumption.

Valid for lacquers and varnishes, basecoats, enamels, waterborne paints, light primers,..., in general, medium viscosity products.

REGULATIONS:
2006/42/CE
ATEX Ex II 2G, IIB T3 x
UNE-EN ISO 80079-36:20,
UNE-EN ISO 12100:2012, EN12621,
EN12162 and EN 1127-1

RAIDER 300 Mix X gravity deposit version

TECHNICAL DATA

		SAGOLA RAIDER 300 Mix X
Weight (standard)	15.5 Kilograms	34.17 lbs
Dimensions (standard)	41.5 x 39 x 74.5 cm.	16.34 x 15.35 x 29.33 “
Stroke	68 mm.	2.68 “
Maximum air inlet pressure	7 bar	102 psi
Free flow (60 cycles/min.)	1.8 L/min.	0.4 gpm (0.47 US gpm)
Flow per cycle	30 c.c.	0.006 gpm (0.008 US gpm)
Air inlet	1/4” BSP F - Us-Mil Quick coupling	
Product output	BSP 1/4” M	
Maximum product outlet pressure	215 bar	3,118 psi
Maximum nozzle	0.013 “	

VERSIONS

Description	Code
Trolley version and absorption probe (standard)	**30951602**
Trolley version and gravity deposit	**30951603**
Wall support and absorption probe version	**30951605**
Wall support and gravity deposit version	**30951604**
Full RAIDER 300 Mix X **painting equipment** standard version. Includes mixed X3500 Mix spraygun and 5 m. (16.4 ft) mixed air and product hose.	**30951698**

Mixed X3500 Mix spray gun special for industrial jobs. Small and ergonomic. High levels of transfer.

5 m. air and product hose assembly with Nylon cover. Light and resistant hose.

Sagola MACK 150 X

Sagola's MACK professional line has been designed and manufactured with the needs of small and medium-sized metal and wood industries in mind.

High production pneumatic equipment with a mixed painting system.

Easy to use and low maintenance. Long life even with the most problematic materials. Low air consumption.

Valid for lacquers and varnishes, basecoats, enamels, backgrounds and light primers and antioxidants.

REGULATIONS:
2006/42/CE
ATEX Ex II 2G, IIB T3 x
UNE-EN ISO 80079-36:20,
UNE-EN ISO 12100:2012, EN12621,
EN12162 and EN 1127-1

MACK 150 X gravity deposit version

TECHNICAL DATA

	SAGOLA MACK 150 X	
Weight (standard)	16.8 Kilograms	37 lbs
Dimensions (standard)	48 x 47 x 87.5 cm.	18.9 x 18.5 x 34.5 "
Maximum air inlet pressure	7 bar	102 psi
Free flow (60 cycles/min.)	2.7 L/min.	0.59 gpm (0.71 US gpm)
Flow per cycle	45 c.c.	0.01 gpm (0.012 US gpm)
Air inlet	1/4" BSP F - Us-Mil Quick coupling	
Product output	BSP 1/4" M	
Maximum product outlet pressure	91 bar	1,320 psi
Maximum nozzle	0.018 "	

VERSIONS

Description	Code
Trolley version and absorption probe (standard)	**30931901**
Trolley version and gravity deposit	**30931902**
Wall support and absorption probe version	**30931903**
Wall support and gravity deposit version	**30931904**
Full MACK 150 X **painting equipment** standard version. Includes mixed Mini Xtreme Mix spraygun and 5 m. (16.4 ft) mixed air and product hose.	**30931999**

Mixed X3500 Mix spray gun special for industrial jobs. Small and ergonomic. High levels of transfer.

5 m. air and product hose assembly with Nylon cover. Light and resistant hose.

Sagola MACK 320 Mix X

High production pneumatic equipment with a mixed painting system. Sagola MACK professional line.

Easy to use and low maintenance. Long life even with the most problematic materials. Very low air consumption.

The MACK line has been designed and manufactured with the needs of medium-sized metal and wood industries in mind.

Valid for lacquers and varnishes, basecoats, enamels, light primers,..., in general, medium viscosity products.

REGULATIONS:
2006/42/CE
ATEX Ex II 2G, IIB T3 x
UNE-EN ISO 80079-36:20,
UNE-EN ISO 12100:2012, EN12621,
EN12162 and EN 1127-1

MACK 320 Mix X gravity deposit version

TECHNICAL DATA

	SAGOLA MACK 320 Mix X	
Weight (standard)	17 Kilograms	37.5 lbs
Dimensions (standard)	48 x 47 x 87.5 cm.	18.9 x 18.5 x 34.5 “
Maximum air inlet pressure	7 bar	102 psi
Free flow (60 cycles/min.)	2.7 L/min.	0.59 gpm (0.71 US gpm)
Air inlet	1/4” BSP F - Us-Mil Quick coupling	
Product output	BSP 1/4” M	
Maximum product outlet pressure	226 bar	3,278 psi
Maximum nozzle	0.018 “	

VERSIONS

Description	Código
Trolley version and absorption probe (standard)	**30932003**
Trolley version and gravity deposit	**30932004**
Wall support and absorption probe version	**30932006**
Wall support and gravity deposit version	**30932009**
Full MACK 320 Mix X **painting equipment** standard version. Includes mixed Mini Xtreme Mix spraygun and 5 m. (16.4 ft) mixed air and product hose.	**30932099**

Mixed X3500 Mix spray gun special for industrial jobs. Small and ergonomic. High levels of transfer.

5 m. air and product hose assembly with Nylon cover. Light and resistant hose.

Introduction. Bellows Equipment

Sagola bellows equimpent

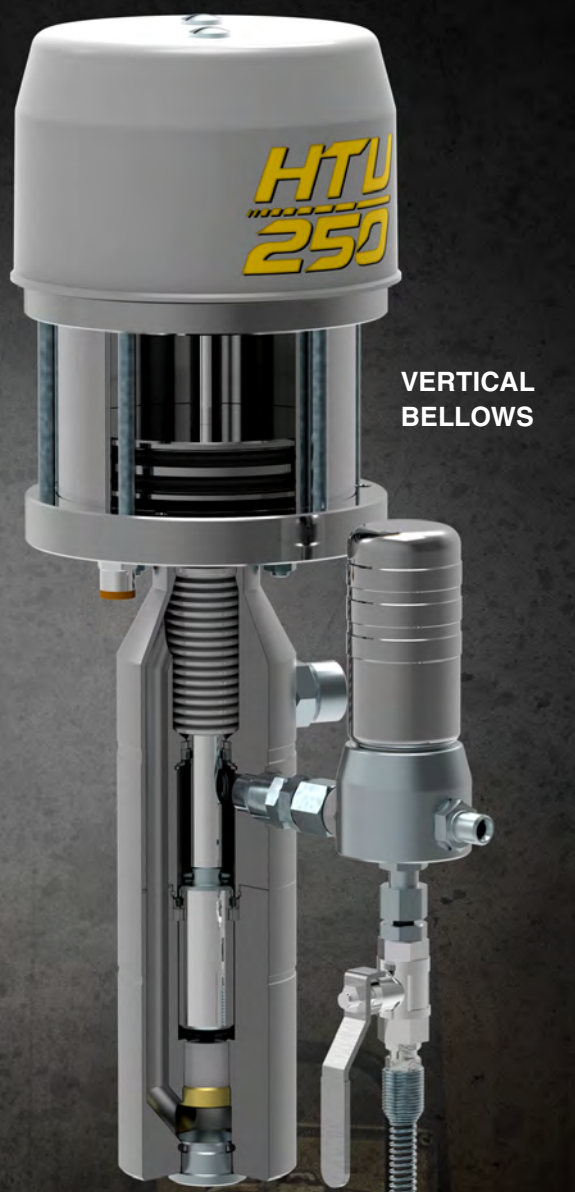

VERTICAL BELLOWS

Sagola is a specialist in the design and manufacture of pneumatic bellows pumps. A unique system that multiplies the resistance of the equipment and reduces maintenance costs.

Fluid flow rates close to 10L/min.
Great contribution of product to
Less cycles = Less wear = Less maintenance costs.

A firm commitment to technique and durability aimed at guaranteeing exceptional performance in the harshest conditions of use.

The best option for the application of complex products with high reactivity, fast drying (UV), thixotropic, etc...

HORIZONTAL BELLOWS

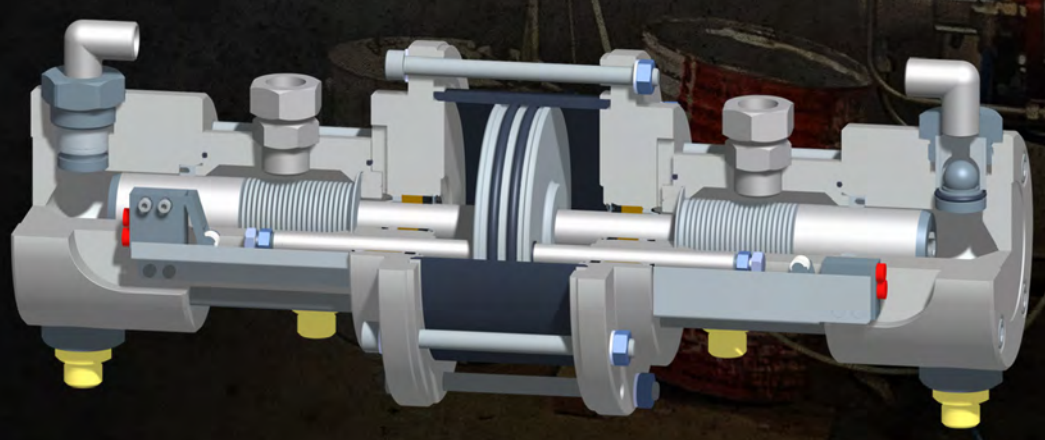

Sagola HTV 250 X (vertical bellows)

The Sagola HTV 250 X incorporates a vertical bellows system that provides exceptional life in the harshest conditions of use. Specially designed for working with “difficult” products, it completely eliminates packing gland leaks, multiplying the life of conventional equipment by 5.

It requires no lubrication in the shaft area. Oversized valves for less wear. Oversized air distributor to avoid freezing.

Maximum protection for complex products:

- High reactivity
- Thixotropic
- Quick drying (UV)
- Waterborne products

REGULATIONS:

2006/42/CE
ATEX Ex II 2G, IIB T3 x
UNE-EN ISO 80079-36:20,
UNE-EN ISO 12100:2012, EN12621,
EN12162 and EN 1127-1

TECHNICAL DATA

		SAGOLA HTV 250 X
Weight (standard)	30 Kilograms	66 lbs
Dimensions (standard)	46.5 x 46 x 87.5 cm.	18.3 x 18.1 x 34.45 “
Max. air inlet pressure	7 bar	102 psi
Free flow (60 cycles/min.)	2.54 L/min.	0.56 gpm (0.67 US gpm)
Flow per cycle	42 c.c.	0.009 g/min. (0.011 imp Gal)
Air inlet	1/4” BSP F - Us-Mil Quick coupling	
Product output	BSP 1/4” M	
Maximum product outlet pressure	176 bar	2,552 psi
Maximum nozzle	0.018 “	

VERSIONS

Description	Code
Trolley version and absorption probe (standard)	**30931801**
Full HTV 250 X **painting equipment** standard version. Includes mixed Mini Xtreme Mix spraygun and 5 m. (16.4 ft) mixed air and product hose.	**30931899**

Mixed X3500 Mix spray gun special for industrial jobs. Small and ergonomic. High levels of transfer.

5 m. air and product hose assembly with Nylon cover. Light and resistant hose.

Sagola HT 10/15/25 X (horizontal bellows)

The horizontal double bellows offers flow levels unattainable by conventional piston systems. Ideal for feeding several guns at the same time, automatic painting lines, continuous painting industries...

Continuous production Total tightness. Ideal for UV products, polyesters or polyurethanes.

Minimum wear. Greater product contribution with less number of cycles. Higher durability compared to the traditional packing system.

0.35 cfm (9.75 L/min) free flow.

More flow at less pressure.

REGULATIONS:

2006/42/CE
ATEX Ⓔx II 2G, IIB T3 x
UNE-EN ISO 80079-36:20,
UNE-EN ISO 12100:2012, EN12621,
EN12162 and EN 1127-1

TECHNICAL DATA

	HT 10 X	HT 15 X	HT 25 X
Weight (standard)	41 Kg. (90.4 lbs)	42 Kg. (92.5 lbs)	45 Kg. (99.2 lbs)
Dimensions (cm)	52.6 x 57.6 x 87.5 cm.		
Dimensions (inches)	20.7 x 22.7 x 34.4 “		
Maximum air inlet pressure	6 bar (87 psi)		
Free flow (60 cycles/min.)	9.75 L/min. (2.14 gpm) (2.58 US gpm)		
Air inlet	1/4” BSP F - Barb 13 mm.		
Product output	BSP 3/8” M		
Maximum product outlet pressure	66 bar (957 psi)	82 bar (1,189 psi)	148 bar (2,146 psi)

VERSIONS

Description	Code
HT 10 X Trolley version and absorption probe (standard)	**30951901**
HT 10 X Wall support version and absorption probe	**30951902**
Full HT 10 X **painting equipment** standard version.	**30951999**
HT 15 X Trolley version and absorption probe (standard)	**30952001**
HT 15 X Wall support version and absorption probe	**30952002**
Full HT 15 X **painting equipment** standard version.	**30952099**
HT 25 X Trolley version and absorption probe (standard)	**30952301**
HT 25 X Wall support version and absorption probe	**30952302**
Full HT 25 X **painting equipment** standard version.	**30952399**

Mixed X3500 Mix spray gun special for industrial jobs. Small and ergonomic. High levels of transfer.

5 m. air and product hose assembly with Nylon cover. Light and resistant hose.

Accessories for mixed spray guns

Mixed Air caps (TIPS)

Recommended application	TIP Description Fixed	TIP Description Reversible	Nozzle (inchs / mm.)	Angle	Fan width at 30 cm.	Water flow at 100 bar	Code Fixed TIP Extra Finish	Code Reversible TIP Standard	Code Reversible TIP LP/Fine Finish
FINISHES LACQUERS ENAMELS MOLD RELEASE	09 / 20	290	0.009” / 0.23	20°	100-150 mm.	0.25 L/min.	81460518	81450209	81451209
	09 / 40	409	0.009” / 0.23	40°	200-250 mm.	0.25 L/min.	81460519	81450409	81451409
	09 / 60	609	0.009” / 0.23	60°	300-355 mm.	0.25 L/min.	81460521	81450609	81451609
	11 / 20	211	0.011” / 0.28	20°	100-150 mm.	0.37 L/min.	81460527	81450211	81451211
	11 / 40	411	0.011” / 0.28	40°	200-250 mm.	0.37 L/min.	81460529	81450411	81451411
	11 / 50	-	0.011” / 0.28	50°	250-300 mm.	0.37 L/min.	81460530	-	-
	11 / 60	611	0.011” / 0.28	60°	300-355 mm.	0.37 L/min.	81460528	81450611	81451611
	11 / 70	-	0.011” / 0.28	70°	355-405 mm.	0.37 L/min.	81460531	-	-
	-	811	0.011” / 0.28	80°	405-457 mm.	0.37 L/min.	-	81450811	81451811
URETHANES ACRYLICS FONDS AND PRIMERS	13 / 20	213	0.013” / 0.33	20°	100-150 mm.	0.57 L/min.	81460539	81450213	81451213
	13 / 30	-	0.013” / 0.33	30°	150-200 mm.	0.57 L/min.	81460537	-	-
	13 / 40	413	0.013” / 0.33	40°	200-250 mm.	0.57 L/min.	81460540	81450413	81451413
	13 / 50	-	0.013” / 0.33	50°	250-300 mm.	0.57 L/min.	81460541	-	-
	13 / 60	613	0.013” / 0.33	60°	300-355 mm.	0.57 L/min.	81460542	81450613	81451613
	13 / 80	813	0.013” / 0.33	80°	405-457 mm.	0.57 L/min.	81460543	81450813	81451813
FONDS AND PRIMERS	15 / 20	-	0.015” / 0.38	20°	100-150 mm.	0.72 L/min.	81460539	-	-
	15 / 40	415	0.015” / 0.38	40°	150-200 mm.	0.72 L/min.	81460537	81450415	81451415
	15 / 50	-	0.015” / 0.38	50°	200-250 mm.	0.72 L/min.	81460540	-	-
	15 / 60	615	0.015” / 0.38	60°	250-300 mm.	0.72 L/min.	81460541	81450615	81451615
	15 / 80	815	0.015” / 0.38	80°	300-355 mm.	0.72 L/min.	81460542	81450815	81451815
FONDS PRIMERS ANTICORROSIVES HIGH VISCOSITY PRODUCTS	16 / 50	-	0.016” / 0.41	50°	100-150 mm.	0.91 L/min.	81460539	-	-
	-	417	0.017” / 0.43	40°	150-200 mm.	0.93 L/min.			
	18 / 40	-	0.018” / 0.46	40°	150-200 mm.	1.10 L/min.	81460537	-	-
	18 / 60	-	0.018” / 0.46	60°	200-250 mm.	1.10 L/min.	81460540	-	-
	21 / 40	421	0.021” / 0.53	40°	250-300 mm.	1.52 L/min.	81460541	81450421	81451421
	21 / 80	821	0.021” / 0.53	80°	300-355 mm.	1.52 L/min.	81460542	81450821	81451821

Both the **product contribution** and the **fan size** in the pressure guns are directly related to the product pressure set by the use, the viscosity of said product and the characteristics of the hose. Therefore, a reference value cannot be established.

Product filters

for XMIX guns

Code	Description
56418057	Filter holder (1/4” - 3/8”) + Mesh Filter (100 + 60)
56418053	100 mesh filter (10 units)
56418054	60 mesh filter (10 units)
83660037	100 layers filter
30010015	Tip microfilters (10 units)

Accessories

for XMIX guns

Code	Description
56410104	Filter holder
56418615	Product tube kit

Accessories for mixed pumps

Oil for pumps

Pump Maintenance Oil.

Code	Description
30090099	Hydraulic oil RENOLIN MR 10
30090098	Packing oil OILPACK

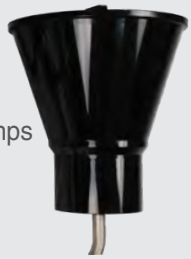

Gravity deposit

5 L. capacity for RAIDER/MACK pumps

Code	Description
30090091	5 L. gravity deposit

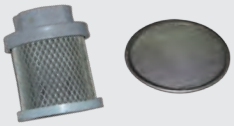

Absorption probe

for RAIDER/MACK pumps

Code	Description
86465206	Absorption Probe Kit MACK 150/320X
49000741	Absorption Probe Kit RAIDER 300X
56415905	Absorption Probe Kit HTV 250X
83660047	Narrow pass absorption filter
56418055	Round filter 40 microns

Antipulsation Filter

for RAIDER/MACK pumps

Code	Description
83660009	100 mesh filter
56418582	60 mesh filter

Other accessories

for pneumatic pumps (RAIDER/MACK)

Code	Description
84260099	Purge kit
56418543	Absorption valve
56418485	Lower packing kit RAIDER
56418498	Upper packing kit RAIDER
56418545	Lower packing kit MACK
56418546	Upper packing kit MACK
56418650	Full hydraulic kit RAIDER
56418549	Full hydraulic kit MACK
56418538	Pneumatic shaft kit MACK 150X
56418539	Pneumatic shaft kit MACK 320X
56418652	Pneumatic shaft kit RAIDER

Air and product hose

High pressure hose for mixed painting equipment. Air hose 6 x 8 mm. (version for gun with quick coupling) and 8 x 10 mm. (version for gun with M16 connection) and product hose BSP 1/4" F, with Nylon cover.
(Description page 148)

Code	Description
86463804	5 m. air hose 8 x 10 mm. + product hose
86463869	7 m. air hose 8 x 10 mm. + product hose
86463805	10 m. air hose 8 x 10 mm. + product hose
86463806	15 m. air hose 8 x 10 mm. + product hose
56414036*	7 m. air hose 6 x 8 mm. + product hose
56414037*	11 m. air hose 6 x 8 mm. + product hose

** Version for gun with quick connection*

KEMPEL
PYMA

03

Airless System

High pressure systems that do not use air to spray paint.

The “airless” system is ideal for applying high microns and painting large surfaces, reaching exceptional levels of product transfer.

Ships, cisterns, tanks, interior-exterior treatments, modular furniture, large metallic constructions...

In short, large painting projects or application of highly viscous paints, anti-corrosion treatments, etc... Projects in which application speed and product savings are the most important factors.

Sagola PSAM 550

Applications:

Varnishes, lacquers, enamels, primers, solvent-based or water-based products, 1k and 2k solvent-based or water-based primers and finishes, and polyurethanes

Designed for high-pressure painting using an airless spray system.

Advantages of the airless system: speed, high coating thickness, and minimal overspray.

Capable of withstanding pressures up to 550 bar.

Maximum pressure, robustness and demanding

TECHNICAL DATA		SAGOLA PSAM 550
Weight (with swivel coupling)	670 grams	1.47 lbs
Dimensions (with swivel coupling)	16.8 x 22.7 cm.	6.6 x 8.9 “
Width of handle	4.3 cm.	1.71 “
Product inlet connection	BSP 1/4” M Swivel	
Deposit	Product inlet via Airless pump	
Product filter	Green (30 mesh); White (50 mesh); Yellow (100 mesh); Red (200 mesh)	
Recommended working pressure	550 bar (7,977 psi)	
Product outlet	3.20 mm. (0.126”) diffuser head	
Operating temperature range	0 - 60°C	32 - 140°F
Materials in contact with the product	Stainless steel, Aluminum, Anodized aluminum, Polyamide, PTFE, UHMWPE, Tungsten carbide and copper	

Sagola PSAM 550

The Sagola PSAM 550 is a high-pressure Airless spray gun designed for the most demanding professional applications. Its airless spraying system reaches up to 550 bar, delivering transfer efficiency, application speed, and finish quality that are unmatched by other painting systems.

Built to withstand intensive working conditions, it combines a highly robust and durable structure with carefully designed ergonomics. It features a stainless steel trigger with a wide contact surface, improving comfort and handling even during continuous production sessions.

The tungsten carbide seats and seals, together with the anti-corrosion treatment applied to the fluid passages, ensure consistent performance and extended service life. The swivel fitting at the product inlet facilitates access to complex areas, improving the operator's freedom of movement.

Its wide range of tungsten carbide tips allows the application of low-, medium-, and high-viscosity sprayable products. In addition, the PSAM 550 offers four filter options (30, 50, 100, and 200 mesh) to adapt to the characteristics of each material and ensure a uniform, consistent finish.

REGULATIONS:
2006/42/CE,
EN 1953:2013
2014/34/CE, ATEX Ex II 2G x
UNE-EN ISO 80079-36:2017

Spraygun main news

01 BODY in forged and anodized aluminium, highly resistant and light. High corrosion protection.

02 CLOSURES AND SEATS manufactured in Tungsten Carbide.

03 TRIGGER. 100% made of stainless steel. With a large contact surface, which improves comfort and handling.

04 PRODUCT INLET Product inlet swivel coupling for better ergonomics.

05 PRODUCT FILTER. Variety of filters available

VERSIONS / ACCESSORIES

Description		Code
PSAM 550 Airless Gun*		30170113
PSAM 550 Airless Gun (with swivel head)		30170112
(*) *Does not include swivel head and nozzle*		
Head adapter coupling kit 11/16 F - 7/8 M (included)	**Accessory**	49000353

Body

Forged and anodized aluminum body of high resistance and great durability. extremely robust elements.

High resistance

Elements made of Tungsten Carbide, such as the nozzle closure and the needle seat. Anti-corrosion treatment throughout the gun.

Trigger

Made of stainless steel.

Swivel coupling

Greater smoothness and ease of turning with high pressures. High reliability. Great resistance. Avoid twisting the hose.

Sagola PSAM 350

Applications:

Varnishes, lacquers, enamels, primers, solvent-based or water-based products, 1k and 2k solvent-based or water-based primers and finishes, and polyurethanes

Airless spray system. Designed for high-pressure applications up to 380 bar. Characterized by its speed and ability to deliver high paint thicknesses with minimal overspray during application.

Professional power with precision and control

TECHNICAL DATA		SAGOLA PSAM 350
Weight (with swivel coupling)	549 grams	1.21 lbs
Dimensions (with swivel coupling)	16.5 x 21.7 cm.	6.5 x 8.5 “
Width of handle	2.5 cm.	1 “
Product inlet connection	BSP 1/4” M Swivel	
Deposit	Product inlet via Airless pump	
Product filter	Green (30 mesh); White (50 mesh); Yellow (100 mesh); Red (200 mesh)	
Recommended working pressure	380 bares (5,510 psi)	
Operating temperature range	0 - 60°C	32 - 140°F
Materials in contact with the product	Stainless steel, Aluminum, Anodized aluminum, Polyamide, PTFE, UHMWPE, Tungsten carbide and copper	

Sagola PSAM 350

The Sagola PSAM 350 is a high-pressure Airless spray gun designed to perform efficiently in demanding professional environments. Its airless spraying system allows operation up to 380 bar (5,510 psi), achieving excellent product transfer efficiency, high application speed, and high-quality uniform finishes.

Designed for intensive use, it features a robust construction combined with ergonomics that make work easier during long operating sessions. The stainless steel trigger, with a wide contact surface, improves control and comfort in continuous applications.

Its internal tungsten carbide components and anti-corrosion treatment ensure durability and consistent performance. The swivel fitting provides greater freedom of movement and easier access to hard-to-reach areas.

It is compatible with different tip sizes to adapt to products of varying viscosities and offers several filter options (30, 50, 100, and 200 mesh), ensuring a uniform finish in every application.

REGULATIONS:
2006/42/CE,
EN 1953:2013
2014/34/CE, ATEX Ex II 2G x
UNE-EN ISO 80079-36:2017

Spraygun main news

01 BODY in forged and anodized aluminium, highly resistant and light. High corrosion protection.

02 CLOSURES AND SEATS manufactured in Tungsten Carbide.

03 TRIGGER. 100% made of stainless steel. Four fingers for greater comfort of use and reduced fatigue.

04 PRODUCT INLET Product inlet swivel coupling for better ergonomics.

05 PRODUCT FILTER.
Variety of filters available

ANTICORROSIVE TREATMENTO EXTERIOR AND INTERIOR

VERSIONS / ACCESSORIES

Description		Code
PSAM 500 Airless Gun*		30170108
(*) *Does not include swivel head and nozzle*		
Head adapter coupling kit 11/16 F - 7/8 M (included)	**Accessory**	49000353

Body

Forged and anodized aluminum body of high resistance and great durability. extremely robust elements.

High resistance

Elements made of Tungsten Carbide, such as the nozzle closure and the needle seat. Anti-corrosion treatment throughout the gun.

Trigger

Made of stainless steel. Four fingers for greater comfort.

Swivel coupling

Greater smoothness and ease of turning with high pressures. High reliability. Great resistance. Avoid twisting the hose.

Sagola PSAM 104

The Sagola PSAM 104 high pressure airless gun recommended for electric and pneumatic airless painting equipment that does not exceeding a working pressure of 250 bar.

It is recommended for all types of medium viscosity products.

Both seats and closures are manufactured in Tungsten carbide.

Includes 1/4" M swivel coupling and filter holder.

REGULATIONS:
2006/42/CE,
EN 1953:2013
2014/34/CE, ATEX Ex II 2G x
UNE-EN ISO 80079-36:2017

VERSIONS / ACCESSORIES

Description		Code
PSAM 104 Airless Gun*		**30170103**
(*) *Does not include swivel head and nozzle*		
Head adapter coupling kit 11/16" F - 7/8" M (included)	**Accessory**	**49000353**

Body

Forged and anodized aluminum body of high resistance and great durability. Extremely robust elements.

High strength

Elements made of Tungsten Carbide, such as the nozzle closure and the needle seat. Anti-corrosion treatment throughout the gun.

Trigger

Made of stainless steel.

Swivel coupling

Greater smoothness and ease of turning with high pressures. High reliability. Great resistance. Avoid twisting the hose.

TECHNICAL DATA

	SAGOLA PSAM 104	
Weight: (with nozzle)	530 g.	1.17 lbs
Dimensions: (with nozzle)	13 x 23.5 cm.	5.12 x 9.25 "
Handle Width	2.5 cm.	1 "
Product input connection	BSP 1/4" M Swivel	
Deposit	Product input by Airless pump	
Product Filter	White (50 mesh); Yellow (100 mesh); Red (200 mesh)	
Maximun working pressure	250 bar (3,626 psi)	
Operating temperature range	0 - 60°C	32 - 140°F
Materials in contact with the product	Stainless steel, Nylon, Aluminum, Viton, Tungsten Carbide and Copper	

Sagola PSAA 108

Automatic airless gun for spraying medium and low viscosity products.

Forged and anodized aluminum body. Driven by pneumatic pilot. Closure in Tungsten Carbide.

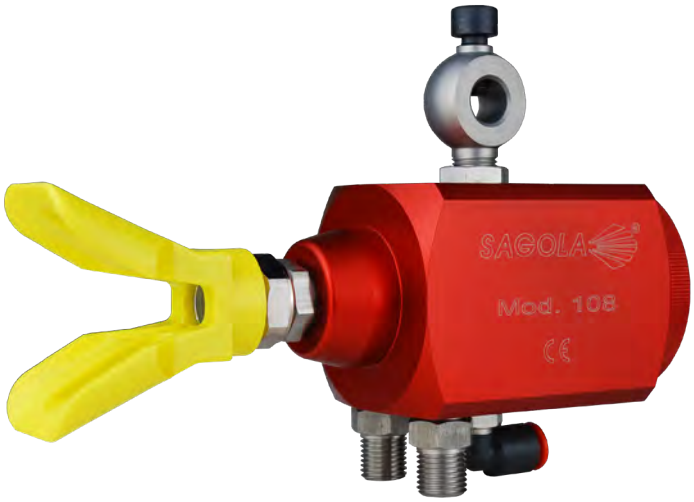

REGULATIONS:
2006/42/CE,
ATEX Ⓔⓧ 2G T4 x (Directiva 2014/34/CE)
EN 1953:2013,
UNE-EN ISO 12100:2012,
UNE 1127-1:2012, EN 13463-1:2011

Body

Forged and anodized aluminum body. Great durability of the elements. Prepared for painting lines with recirculation system.

Connections

¼" BSPT male product inlet. Air connection (pilot): quick connector to 8 mm. tube.

Anchoring system

Support kit included on shaft up to 12 mm. in diameter. Body on UNF - 1/2" x 20 threaded hole.

Tip Holder

Fixed (included) for the use of fixed nozzles/tips. Rotating head ref. 81461101 not included with gun for use with rotating nozzles/tips.

TECHNICAL DATA

	SAGOLA PSAA 108	
Weight	817 g.	1.8 lbs
Dimensions	17.8 x 5.9 x 8.1 cm.	7 x 2.3 x 3.2"
Air connector (pilot)	Quick connection 8 mm. tube.	
Product input connector	BSP 1/4" M	
Maximun working pressure	300 bar (4,351 psi)	
Operating temperature range	0 - 72°C	32 - 162°F
Materials in contact with the product	Stainless steel, Nylon, Aluminum, Viton and Tungsten Carbide	

VERSIONS

Description	Code
Automatic Airless Gun PSAA 108*	**30270101**

(*) *Does not include swivel head and nozzle*

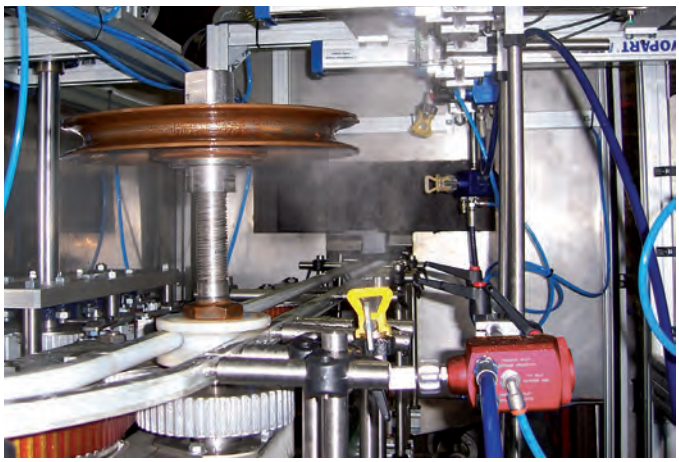

Sagola RAIDER 300 X

High production pneumatic equipment with an airless painting system. RAIDER professional range from Sagola.

This range has been designed and manufactured with the premise of being an exclusive product for professional use with a high level of demand both in terms of performance and image.

Within this section of quality we are committed to technique and durability. This leads us to a complete redesign of the hydraulic zone.

This provides exceptional life in the harshest conditions of use without compromising its performance, which offers a long life with minimal maintenance even when using more problematic materials.

REGULATIONS:
2006/42/CE
ATEX Ex II 2G, IIB T3 x
UNE-EN ISO 80079-36:20,
UNE-EN ISO 12100:2012, EN12621,
EN12162 and EN 1127-1

RAIDER 300 X gravity deposit version

TECHNICAL DATA

	RAIDER 300 X	
Weight (standard)	15.5 Kilograms	34.17 lbs
Dimensions (standard)	41.5 x 39 x 74.5 cm.	16.34 x 15.35 x 29.33 “
Stroke	68 mm.	2.68 “
Maximum air inlet pressure	7 bar	102 psi
Free flow (60 cycles/min.)	1.8 L/min.	0.4 gpm (0.47 US gpm)
Flow per cycle	30 c.c.	0.006 gpm (0.008 US gpm)
Air inlet	1/4” BSP F - Us-Mil Quick coupling	
Product output	BSP 1/4” M	
Maximum product outlet pressure	215 bar	3,118 psi
Maximum tip	0.013 “	

VERSIONS

Description	Code
Trolley version and absorption probe (standard)	**30951602**
Trolley version and gravity deposit	**30951603**
Wall support and absorption probe version	**30951605**
Wall support and gravity deposit version	**30951604**
Full RAIDER 300 X **painting equipment** standard version. Includes PSAM 104 airless gun and 10 m. (32.8 ft) product hose.	**30951699**

PSAM 104 airless gun special for medium viscosity products. Seats and closures in Tungsten Carbide.

10 m. Product hose with double metal reinforcement and 1/4” terminals. Robust and resistant.

Sagola MACK 320 X

High production pneumatic equipment with an airless painting system. MACK professional range from Sagola.

High performance Mack airless system. Specially designed for those industries with medium-high levels of use.

Reduced maintenance and packing self-adjustment system. More cycles, less maintenance.

Varnishes and waterborne paints, lacquers, funds and primers, enamels and antioxidants.

REGULATIONS:
2006/42/CE
ATEX Ex II 2G, IIB T3 x
UNE-EN ISO 80079-36:20,
UNE-EN ISO 12100:2012, EN12621,
EN12162 and EN 1127-1

MACK 320 X gravity deposit version

TECHNICAL DATA

	MACK 320 X	
Weight (standard)	17 Kilograms	37.5 lbs
Dimensions (standard)	48 x 47 x 87.5 cm.	18.9 x 18.5 x 34.5 “
Maximum air inlet pressure	7 bar	102 psi
Free flow (60 cycles/min.)	2.7 L/min.	0.59 gpm (0.71 US gpm)
Air inlet	1/4” BSP F - Us-Mil Quick coupling	
Product output	BSP 1/4” M	
Maximum product outlet pressure	226 bar	3,278 psi
Maximum tip	0.018 “	

VERSIONS

Description	Code
Trolley version and absorption probe (standard)	**30932001**
Trolley version and gravity deposit	**30932002**
Wall support and absorption probe version	**30932005**
Wall support and gravity deposit version	**30932007**
Full MACK 320 X **painting equipment** standard version. Includes PSAM 104 airless gun and 10 m. (32.8 ft) product hose.	**30932098**

PSAM 104 airless gun special for medium viscosity products. Seats and closures in Tungsten Carbide.

10 m. Product hose with double metal reinforcement and 1/4” terminals. Robust and resistant.

Sagola MACK 400 / 600 X

High production pneumatic equipment with an airless painting system. MACK professional range from Sagola.

High production pneumatic airless equipment. High flow rates and product pressure.

Valves in Tungsten Carbide.

Specially designed for painting large surfaces, thick layers, high viscosities, “protective” industry, etc...

Valid for waterborne products as well as epoxys, anticorrosive primers, intermediate and thick layers, chlorinated rubber, bituminous, mold release agents...

REGULATIONS:
2006/42/CE
ATEX Ex II 2G, IIB T3 x
UNE-EN ISO 80079-36:20,
UNE-EN ISO 12100:2012, EN12621,
EN12162 and EN 1127-1

TECHNICAL DATA

	MACK 400 X		MACK 600 X	
Weight (standard)	62 Kilograms	137 lbs	63 Kilograms	139 lbs
Dimensions (standard)	54.5 x 54.6 x 100.7	21.4 x 21.5 x 39.6 “	54.5 x 54.6 x 100.7	21.4 x 21.5 x 39.6 “
Maximum air consumption (60 cycles/min.)	1,500 L/min.	53 cfm	1,500 L/min.	53 cfm
Maximum air inlet pressure	6 bar (87 psi)		6 bar (87 psi)	
Free flow (60 cycles/min.)	7.2 L/min.	0.25 cfm	5.2 L/min.	0.18 cfm
Air inlet	1/2” BSP F - Barb 13 mm.			
Product output	BSP 1/4” M			
Maximum product outlet pressure	240 bar	3,481 psi	360 bar	5,221 psi
Maximum nozzle	0.032 “			
Maximum nozzle for use 2 guns	0.018 “			

VERSIONS — MACK 400 X

Description	Code
Trolley version and absorption probe	**30932201**
Full MACK 400 X **painting equipment** version. Includes PSAM 550 airless gun and 10 m. (32.8 ft) product hose.	**30932299**

VERSIONS — MACK 600 X

Description	Code
Trolley version and absorption probe	**30932101**
Full MACK 600 X **painting equipment** version. Includes PSAM 550 airless gun and 10 m. (32.8 ft) product hose.	**30932199**

PSAM 550 airless spray gun special for medium-high viscosity products. Seats and closures in Tungsten Carbide.

10 m. Product hose with double metal reinforcement and 1/4” terminals. Robust and resistant.

Sagola ATLANTA 200 PLUS

The best option for medium production industries and decoration projects. Ideal for effortlessly applying high quality paints while maintaining a very high transfer rate.

Single-phase motor of 1 H.P. to reach 160 bar (2,321 psi) of maximum fluid pressure. Ease of operation. Easy cleaning thanks to the incorporation of a recirculation probe.

Electric membrane pump with 5 liter deposit or suction probe. Application of lacquers, primers, enamels and varnishes. In general, medium viscosity products.

REGULATIONS:
2006/42/CE
ATEX Ex II 2G, IIB T3 x
UNE-EN ISO 80079-36:20,
UNE-EN ISO 12100:2012, EN12621,
EN12162 and EN 1127-1

TECHNICAL DATA

	ATLANTA 200 PLUS	
Weight (standard)	27 Kilograms	59.5 lbs
Dimensions (standard)	42 x 25 x 63 cm.	16.5 x 9.8 x 24.8 “
Electric motor	Single-phase. Switch with thermal protector	
Power supply - Frequency	220 V - 50 Hz	
Engine power	740 w (1 H.P.)	
Engine consumption	5.4 A	
Working pressure	0 - 160 bar	0 - 2,321 psi
Free flow (water viscosity)	2 L/min.	0.07 cfm
Product input	Round metric thread 36 x 2 male	
Product outlet	1/4” BSP Male	
Maximum nozzle	0.018 “	

VERSIONS

Description	Code
Trolley version and suction probe	**30941202**
Trolley version and gravity deposit	**30941201**
Full ATLANTA 200 PLUS **painting equipment** version. Includes PSAM 104 airless gun and 10 m. (32.8 ft) product dispersion hose	**30941299**

PSAM 104 airless spray gun special for medium viscosity products. Seats and closures in Tungsten Carbide

10 m. Product dispersion hose with Polyester reinforcement and 1/4” swivel connector terminals. Robust and resistant.

Sagola ATLANTA 500

Industrial equipment for high production sectors. Construction, wood, metal or exterior painting projects where a compressed air line is not accessible.

2 H.P single-phase motor which reaches 220 bar (3,191 psi) maximum fluid pressure. Ease of operation. Easy cleaning thanks to the incorporation of a recirculation probe.

Large rear wheels, and swivel front wheels to facilitate movement on construction sites.

Electric membrane pump with absorption probe that, optionally, can be equipped with a 25 L deposit. Application of plastic paints, primers, enamels, chlorinated rubber and waterproofing.

REGULATIONS:
2006/42/CE
Low voltage 73/23/CEE,
Electromagnetic compatibility 89/336/CEE,
UNE-EN 292 (1 & 2), UNE-EN 989, UNE-EN 1050, CEI-34, VDE-0530/72

TECHNICAL DATA

	ATLANTA 500		
Weight (standard)	53 Kilograms	116.8 lbs	
Dimensions (standard)	60 x 45 x 60 cm.	23.6 x 17.7 x 23.6 “	
Electric motor	Single-phase. Switch with thermal protector		
Power supply - Frequency	220 V - 50 Hz		
Engine power	1,400 w (2 H.P.)		
Engine consumption	9.8 A		
Working pressure	0 - 220 bar	0 - 3,191 psi	
Free flow (water viscosity)	4.5 L/min.	0.16 cfm	
Product outlet	1/4” BSP Male		
Maximum nozzle	0.026 “	with 2 guns	0.016 “

VERSIONS

Description	Code
Trolley version and absorption probe	**30940801**
Full ATLANTA 500 **painting equipment** version. Includes PSAM 104 airless gun and 10 m. (32.8 ft) product dispersion hose	**30940899**

PSAM 104 airless spray gun special for medium viscosity products. Seats and closures in Tungsten Carbide

10 m. Product dispersion hose with Polyester reinforcement and 1/4” swivel connector terminals. Robust and resistant.

Sagola ATLANTA 800 / 800G

Powerful and robust industrial equipment for high production sectors. Construction, wood, metal or exterior painting projects where a compressed air line is not accessible.

2.7 H.P. single-phase motor that reaches 220 bar (3,191 psi) of maximum fluid pressure and a large flow rate of up to 9 L/min. that allow its continued use with one or two guns. Ease of operation. Easy cleaning thanks to the incorporation of a recirculation probe.

Large rear wheels, and swivel front wheels to facilitate movement on construction sites.

Electric membrane pump with absorption probe that, optionally, can be equipped with a 25 L deposit. Versatile equipment for the application of primers, enamels and plastics, waterproofing and intumescent. Includes special anti-vibration system.

REGULATIONS:
2006/42/CE
Low voltage 73/23/CEE,
Electromagnetic compatibility 89/336/CEE,
UNE-EN 292 (1 & 2), UNE-EN 989, UNE-EN 1050, CEI-34, VDE-0530/72

TECHNICAL DATA

	ATLANTA 800		
Weight (standard)	72 Kilograms	159 lbs	
Dimensions (standard)	110 x 75 x 90 cm.	43.3 x 29.5 x 35.4 “	
Electric motor	Single-phase. Switch with thermal protector		
Power supply - Frequency	220 V - 50 Hz		
Engine power	2,000 w (2.7 H.P.)		
Engine consumption	14.5 A		
Working pressure	0 - 220 bar	0 - 3,191 psi	
Free flow (water viscosity)	7.5 L/min.	0.26 cfm	
Product outlet	1/4” BSP Male		
Maximum nozzle	0.032 “	with 2 guns	0.026 “

VERSIONS — ATLANTA 800

Description	Code
Trolley version and absorption probe	**30940901**
Full ATLANTA 800 **painting equipment** version. Includes PSAM 550 airless gun and 10 m. (32.8 ft) product dispersion hose	**30940999**

Petrol version

with a Honda 4-stroke engine with a power of 5.5 H.P.

VERSIONS — ATLANTA 800G

Description	Code
Trolley version and absorption probe	**30941001**

PSAM 550 airless spray gun special for medium-high viscosity products. Seats and closures in Tungsten Carbide

10 m. Product dispersion hose with Polyester reinforcement and 1/4” swivel connector terminals. Robust and resistant.

Airless gun accessories

Reversible Airless Spray Tips

Code	TIP	Orifice	Fan width		Flow rate	
		Inches	Inches	cm.	gal/min.	L/min.
81461301	107 PT	0.007	2 - 4	5.1 - 10.2	0.05	0.18
81461302	207 PT	0.007	4 - 6	10.2 - 15.2	0.05	0.18
81461303	307 PT	0.007	6 - 8	15.2 - 20.3	0.05	0.18
81461304	407 PT	0.007	8 - 10	20.3 - 25.4	0.05	0.18
81461305	507 PT	0.007	10 - 12	25.4 - 30.5	0.05	0.18
81461306	108 PT	0.008	2 - 4	5.1 - 10.2	0.06	0.22
81461307	208 PT	0.008	4 - 6	10.2 - 15.2	0.06	0.22
81461308	308 PT	0.008	6 - 8	15.2 - 20.3	0.06	0.22
81461309	408 PT	0.008	8 - 10	20.3 - 25.4	0.06	0.22
81461310	508 PT	0.008	10 - 12	25.4 - 30.5	0.06	0.22
81461311	109 PT	0.009	2 - 4	5.1 - 10.2	0.07	0.25
81461312	209 PT	0.009	4 - 6	10.2 - 15.2	0.07	0.25
81461313	309 PT	0.009	6 - 8	15.2 - 20.3	0.07	0.25
81461314	409 PT	0.009	8 - 10	20.3 - 25.4	0.07	0.25
81461316	509 PT	0.009	10 - 12	25.4 - 30.5	0.07	0.25
81461317	609 PT	0.009	12 - 14	30.5 - 35.6	0.07	0.25
81461318	110 PT	0.010	2 - 4	5.1 - 10.2	0.09	0.33
81461319	210 PT	0.010	4 - 6	10.2 - 15.2	0.09	0.33
81461320	310 PT	0.010	6 - 8	15.2 - 20.3	0.09	0.33
81461321	410 PT	0.010	8 - 10	20.3 - 25.4	0.09	0.33
81461322	510 PT	0.010	10 - 12	25.4 - 30.5	0.09	0.33
81461323	610 PT	0.010	12 - 14	30.5 - 35.6	0.09	0.33
81461324	710 PT	0.010	14 - 16	35.6 - 40.6	0.09	0.33
81461325	111 PT	0.011	2 - 4	5.1 - 10.2	0.10	0.37
81461326	211 PT	0.011	4 - 6	10.2 - 15.2	0.10	0.37
81461327	311 PT	0.011	6 - 8	15.2 - 20.3	0.10	0.37
81461328	411 PT	0.011	8 - 10	20.3 - 25.4	0.10	0.37
81461329	511 PT	0.011	10 - 12	25.4 - 30.5	0.10	0.37
81461330	611 PT	0.011	12 - 14	30.5 - 35.6	0.10	0.37
81461331	711 PT	0.011	14 - 16	35.6 - 40.6	0.10	0.37
81461332	811 PT	0.011	16 - 18	40.6 - 45.7	0.10	0.37
81461333	911 PT	0.011	18 - 20	45.7 - 50.8	0.10	0.37
81461334	112 PT	0.012	2 - 4	5.1 - 10.2	0.12	0.47
81461335	212 PT	0.012	4 - 6	10.2 - 15.2	0.12	0.47
81461336	312 PT	0.012	6 - 8	15.2 - 20.3	0.12	0.47
81461337	412 PT	0.012	8 - 10	20.3 - 25.4	0.12	0.47
81461338	512 PT	0.012	10 - 12	25.4 - 30.5	0.12	0.47
81461339	612 PT	0.012	12 - 14	30.5 - 35.6	0.12	0.47
81461340	712 PT	0.012	14 - 16	35.6 - 40.6	0.12	0.47
81461341	812 PT	0.012	16 - 18	40.6 - 45.7	0.12	0.47
81461342	912 PT	0.012	18 - 20	45.7 - 50.8	0.12	0.47
81461343	113 PT	0.013	2 - 4	5.1 - 10.2	0.15	0.57
81461344	213 PT	0.013	4 - 6	10.2 - 15.2	0.15	0.57
81461345	313 PT	0.013	6 - 8	15.2 - 20.3	0.15	0.57
81461346	413 PT	0.013	8 - 10	20.3 - 25.4	0.15	0.57
81461347	513 PT	0.013	10 - 12	25.4 - 30.5	0.15	0.57
81461348	613 PT	0.013	12 - 14	30.5 - 35.6	0.15	0.57
81461349	713 PT	0.013	14 - 16	35.6 - 40.6	0.15	0.57
81461350	813 PT	0.013	16 - 18	40.6 - 45.7	0.15	0.57
81461351	913 PT	0.013	18 - 20	45.7 - 50.8	0.15	0.57
81461352	114 PT	0.014	2 - 4	5.1 - 10.2	0.17	0.65
81461353	214 PT	0.014	4 - 6	10.2 - 15.2	0.17	0.65
81461354	314 PT	0.014	6 - 8	15.2 - 20.3	0.17	0.65
81461355	414 PT	0.014	8 - 10	20.3 - 25.4	0.17	0.65
81461356	514 PT	0.014	10 - 12	25.4 - 30.5	0.17	0.65
81461357	614 PT	0.014	12 - 14	30.5 - 35.6	0.17	0.65
81461358	714 PT	0.014	14 - 16	35.6 - 40.6	0.17	0.65
81461359	814 PT	0.014	16 - 18	40.6 - 45.7	0.17	0.65
81461360	914 PT	0.014	18 - 20	45.7 - 50.8	0.17	0.65
81461361	115 PT	0.015	2 - 4	5.1 - 10.2	0.19	0.72
81461362	215 PT	0.015	4 - 6	10.2 - 15.2	0.19	0.72
81461363	315 PT	0.015	6 - 8	15.2 - 20.3	0.19	0.72
81461364	415 PT	0.015	8 - 10	20.3 - 25.4	0.19	0.72
81461365	515 PT	0.015	10 - 12	25.4 - 30.5	0.19	0.72
81461366	615 PT	0.015	12 - 14	30.5 - 35.6	0.19	0.72
81461367	715 PT	0.015	14 - 16	35.6 - 40.6	0.19	0.72

Code	TIP	Orifice	Fan width		Flow rate	
		Inches	Inches	cm.	gal/min.	L/min.
81461368	815 PT	0.015	16 - 18	40.6 - 45.7	0.19	0.72
81461369	915 PT	0.015	18 - 20	45.7 - 50.8	0.19	0.72
81461370	116 PT	0.016	2 - 4	5.1 - 10.2	0.24	0.91
81461371	216 PT	0.016	4 - 6	10.2 - 15.2	0.24	0.91
81461372	316 PT	0.016	6 - 8	15.2 - 20.3	0.24	0.91
81461373	416 PT	0.016	8 - 10	20.3 - 25.4	0.24	0.91
81461374	516 PT	0.016	10 - 12	25.4 - 30.5	0.24	0.91
81461375	616 PT	0.016	12 - 14	30.5 - 35.6	0.24	0.91
81461376	716 PT	0.016	14 - 16	35.6 - 40.6	0.24	0.91
81461377	816 PT	0.016	16 - 18	40.6 - 45.7	0.24	0.91
81461378	916 PT	0.016	18 - 20	45.7 - 50.8	0.24	0.91
81461379	117 PT	0.017	2 - 4	5.1 - 10.2	0.26	0.98
81461380	217 PT	0.017	4 - 6	10.2 - 15.2	0.26	0.98
81461381	317 PT	0.017	6 - 8	15.2 - 20.3	0.26	0.98
81461382	417 PT	0.017	8 - 10	20.3 - 25.4	0.26	0.98
81461383	517 PT	0.017	10 - 12	25.4 - 30.5	0.26	0.98
81461384	617 PT	0.017	12 - 14	30.5 - 35.6	0.26	0.98
81461385	717 PT	0.017	14 - 16	35.6 - 40.6	0.26	0.98
81461386	817 PT	0.017	16 - 18	40.6 - 45.7	0.26	0.98
81461387	917 PT	0.017	18 - 20	45.7 - 50.8	0.26	0.98
81461388	118 PT	0.018	2 - 4	5.1 - 10.2	0.29	1.10
81461389	218 PT	0.018	4 - 6	10.2 - 15.2	0.29	1.10
81461390	318 PT	0.018	6 - 8	15.2 - 20.3	0.29	1.10
81461391	418 PT	0.018	8 - 10	20.3 - 25.4	0.29	1.10
81461392	518 PT	0.018	10 - 12	25.4 - 30.5	0.29	1.10
81461393	618 PT	0.018	12 - 14	30.5 - 35.6	0.29	1.10
81461394	718 PT	0.018	14 - 16	35.6 - 40.6	0.29	1.10
81461395	818 PT	0.018	16 - 18	40.6 - 45.7	0.29	1.10
81461396	918 PT	0.018	18 - 20	45.7 - 50.8	0.29	1.10
81461397	119 PT	0.019	2 - 4	5.1 - 10.2	0.34	1.30
81461398	219 PT	0.019	4 - 6	10.2 - 15.2	0.34	1.30
81461399	319 PT	0.019	6 - 8	15.2 - 20.3	0.34	1.30
81461401	419 PT	0.019	8 - 10	20.3 - 25.4	0.34	1.30
81461402	519 PT	0.019	10 - 12	25.4 - 30.5	0.34	1.30
81461403	619 PT	0.019	12 - 14	30.5 - 35.6	0.34	1.30
81461404	719 PT	0.019	14 - 16	35.6 - 40.6	0.34	1.30
81461405	819 PT	0.019	16 - 18	40.6 - 45.7	0.34	1.30
81461406	919 PT	0.019	18 - 20	45.7 - 50.8	0.34	1.30
81461407	120 PT	0.020	2 - 4	5.1 - 10.2	0.37	1.40
81461408	220 PT	0.020	4 - 6	10.2 - 15.2	0.37	1.40
81461409	320 PT	0.020	6 - 8	15.2 - 20.3	0.37	1.40
81461410	420 PT	0.020	8 - 10	20.3 - 25.4	0.37	1.40
81461411	520 PT	0.020	10 - 12	25.4 - 30.5	0.37	1.40
81461412	620 PT	0.020	12 - 14	30.5 - 35.6	0.37	1.40
81461413	720 PT	0.020	14 - 16	35.6 - 40.6	0.37	1.40
81461414	820 PT	0.020	16 - 18	40.6 - 45.7	0.37	1.40
81461415	920 PT	0.020	18 - 20	45.7 - 50.8	0.37	1.40
81461416	121 PT	0.021	2 - 4	5.1 - 10.2	0.40	1.52
81461417	221 PT	0.021	4 - 6	10.2 - 15.2	0.40	1.52
81461418	321 PT	0.021	6 - 8	15.2 - 20.3	0.40	1.52
81461419	421 PT	0.021	8 - 10	20.3 - 25.4	0.40	1.52
81461420	521 PT	0.021	10 - 12	25.4 - 30.5	0.40	1.52
81461421	621 PT	0.021	12 - 14	30.5 - 35.6	0.40	1.52
81461422	721 PT	0.021	14 - 16	35.6 - 40.6	0.40	1.52
81461423	821 PT	0.021	16 - 18	40.6 - 45.7	0.40	1.52
81461424	921 PT	0.021	18 - 20	45.7 - 50.8	0.40	1.52
81461425	122 PT	0.022	2 - 4	5.1 - 10.2	0.44	1.65
81461426	222 PT	0.022	4 - 6	10.2 - 15.2	0.44	1.65
81461427	322 PT	0.022	6 - 8	15.2 - 20.3	0.44	1.65
81461428	422 PT	0.022	8 - 10	20.3 - 25.4	0.44	1.65
81461429	522 PT	0.022	10 - 12	25.4 - 30.5	0.44	1.65
81461430	622 PT	0.022	12 - 14	30.5 - 35.6	0.44	1.65
81461431	722 PT	0.022	14 - 16	35.6 - 40.6	0.44	1.65
81461432	822 PT	0.022	16 - 18	40.6 - 45.7	0.44	1.65
81461433	922 PT	0.022	18 - 20	45.7 - 50.8	0.44	1.65
81461434	223 PT	0.023	4 - 6	10.2 - 15.2	0.48	1.83

*Flow rate calculated for water at 1,450 psi (100 bar, 10 MPa). FAN WIDTH is measured at 305 mm (12") from the surface.

Airless gun accessories

Reversible Airless Spray Tips

PT TECHNOLOGY
SPEEDY7

Code	TIP	Orifice	Fan width		Flow rate	
		Inches	Inches	cm.	gal/min.	L/min.
81461435	323 PT	0.023	6 - 8	15.2 - 20.3	0.48	1.83
81461436	423 PT	0.023	8 - 10	20.3 - 25.4	0.48	1.83
81461437	523 PT	0.023	10 - 12	25.4 - 30.5	0.48	1.83
81461438	623 PT	0.023	12 - 14	30.5 - 35.6	0.48	1.83
81461439	723 PT	0.023	14 - 16	35.6 - 40.6	0.48	1.83
81461440	823 PT	0.023	16 - 18	40.6 - 45.7	0.48	1.83
81461441	923 PT	0.023	18 - 20	45.7 - 50.8	0.48	1.83
81461442	224 PT	0.024	4 - 6	10.2 - 15.2	0.51	1.95
81461443	324 PT	0.024	6 - 8	15.2 - 20.3	0.51	1.95
81461444	424 PT	0.024	8 - 10	20.3 - 25.4	0.51	1.95
81461445	524 PT	0.024	10 - 12	25.4 - 30.5	0.51	1.95
81461446	624 PT	0.024	12 - 14	30.5 - 35.6	0.51	1.95
81461447	724 PT	0.024	14 - 16	35.6 - 40.6	0.51	1.95
81461448	824 PT	0.024	16 - 18	40.6 - 45.7	0.51	1.95
81461449	924 PT	0.024	18 - 20	45.7 - 50.8	0.51	1.95
81461450	225 PT	0.025	4 - 6	10.2 - 15.2	0.56	2.13
81461451	325 PT	0.025	6 - 8	15.2 - 20.3	0.56	2.13
81461452	425 PT	0.025	8 - 10	20.3 - 25.4	0.56	2.13
81461453	525 PT	0.025	10 - 12	25.4 - 30.5	0.56	2.13
81461454	625 PT	0.025	12 - 14	30.5 - 35.6	0.56	2.13
81461455	725 PT	0.025	14 - 16	35.6 - 40.6	0.56	2.13
81461456	825 PT	0.025	16 - 18	40.6 - 45.7	0.56	2.13
81461457	925 PT	0.025	18 - 20	45.7 - 50.8	0.56	2.13
81461458	227 PT	0.027	4 - 6	10.2 - 15.2	0.66	2.50
81461459	327 PT	0.027	6 - 8	15.2 - 20.3	0.66	2.50
81461460	427 PT	0.027	8 - 10	20.3 - 25.4	0.66	2.50
81461461	527 PT	0.027	10 - 12	25.4 - 30.5	0.66	2.50
81461462	627 PT	0.027	12 - 14	30.5 - 35.6	0.66	2.50
81461463	727 PT	0.027	14 - 16	35.6 - 40.6	0.66	2.50
81461464	827 PT	0.027	16 - 18	40.6 - 45.7	0.66	2.50
81461465	927 PT	0.027	18 - 20	45.7 - 50.8	0.66	2.50
81461466	229 PT	0.029	4 - 6	10.2 - 15.2	0.78	2.95
81461467	329 PT	0.029	6 - 8	15.2 - 20.3	0.78	2.95
81461468	429 PT	0.029	8 - 10	20.3 - 25.4	0.78	2.95
81461469	529 PT	0.029	10 - 12	25.4 - 30.5	0.78	2.95
81461470	629 PT	0.029	12 - 14	30.5 - 35.6	0.78	2.95
81461471	729 PT	0.029	14 - 16	35.6 - 40.6	0.78	2.95
81461472	829 PT	0.029	16 - 18	40.6 - 45.7	0.78	2.95
81461473	929 PT	0.029	18 - 20	45.7 - 50.8	0.78	2.95
81461474	231 PT	0.031	4 - 6	10.2 - 15.2	0.90	3.42
81461475	331 PT	0.031	6 - 8	15.2 - 20.3	0.90	3.42
81461476	431 PT	0.031	8 - 10	20.3 - 25.4	0.90	3.42
81461477	531 PT	0.031	10 - 12	25.4 - 30.5	0.90	3.42
81461478	631 PT	0.031	12 - 14	30.5 - 35.6	0.90	3.42
81461479	731 PT	0.031	14 - 16	35.6 - 40.6	0.90	3.42
81461480	831 PT	0.031	16 - 18	40.6 - 45.7	0.90	3.42
81461481	931 PT	0.031	18 - 20	45.7 - 50.8	0.90	3.42
81461482	233 PT	0.033	4 - 6	10.2 - 15.2	1.00	3.80
81461483	333 PT	0.033	6 - 8	15.2 - 20.3	1.00	3.80
81461484	433 PT	0.033	8 - 10	20.3 - 25.4	1.00	3.80
81461485	533 PT	0.033	10 - 12	25.4 - 30.5	1.00	3.80
81461486	633 PT	0.033	12 - 14	30.5 - 35.6	1.00	3.80
81461487	733 PT	0.033	14 - 16	35.6 - 40.6	1.00	3.80
81461488	833 PT	0.033	16 - 18	40.6 - 45.7	1.00	3.80
81461489	933 PT	0.033	18 - 20	45.7 - 50.8	1.00	3.80
81461490	235 PT	0.035	4 - 6	10.2 - 15.2	1.13	4.30
81461491	335 PT	0.035	6 - 8	15.2 - 20.3	1.13	4.30
81461492	435 PT	0.035	8 - 10	20.3 - 25.4	1.13	4.30
81461493	535 PT	0.035	10 - 12	25.4 - 30.5	1.13	4.30
81461494	635 PT	0.035	12 - 14	30.5 - 35.6	1.13	4.30
81461496	735 PT	0.035	14 - 16	35.6 - 40.6	1.13	4.30
81461497	835 PT	0.035	16 - 18	40.6 - 45.7	1.13	4.30
81461498	935 PT	0.035	18 - 20	45.7 - 50.8	1.13	4.30
81461499	237 PT	0.037	4 - 6	10.2 - 15.2	1.34	5.10
81461501	337 PT	0.037	6 - 8	15.2 - 20.3	1.34	5.10
81461502	437 PT	0.037	8 - 10	20.3 - 25.4	1.34	5.10

PT TECHNOLOGY
SPEEDY7

Code	TIP	Orifice	Fan width		Flow rate	
		Inches	Inches	cm.	gal/min.	L/min.
81461503	537 PT	0.037	10 - 12	25.4 - 30.5	1.34	5.10
81461504	637 PT	0.037	12 - 14	30.5 - 35.6	1.34	5.10
81461505	737 PT	0.037	14 - 16	35.6 - 40.6	1.34	5.10
81461506	837 PT	0.037	16 - 18	40.6 - 45.7	1.34	5.10
81461507	937 PT	0.037	18 - 20	45.7 - 50.8	1.34	5.10

LP TECHNOLOGY
SPEEDY7

Code	TIP	Orifice	Fan width		Flow rate	
		Inches	Inches	cm.	gal/min.	L/min.
81461550	108 LP/FF	0.008	2 - 4	5.1 - 10.2	0.06	0.22
81461551	208 LP/FF	0.008	4 - 6	10.2 - 15.2	0.06	0.22
81461552	308 LP/FF	0.008	6 - 8	15.2 - 20.3	0.06	0.22
81461553	408 LP/FF	0.008	8 - 10	20.3 - 25.4	0.06	0.22
81461554	210 LP/FF	0.010	4 - 6	10.2 - 15.2	0.09	0.33
81461555	310 LP/FF	0.010	6 - 8	15.2 - 20.3	0.09	0.33
81461556	410 LP/FF	0.010	8 - 10	20.3 - 25.4	0.09	0.33
81461557	510 LP/FF	0.010	10 - 12	25.4 - 30.5	0.09	0.33
81461558	212 LP/FF	0.012	4 - 6	10.2 - 15.2	0.12	0.47
81461559	312 LP/FF	0.012	6 - 8	15.2 - 20.3	0.12	0.47
81461560	412 LP/FF	0.012	8 - 10	20.3 - 25.4	0.12	0.47
81461561	512 LP/FF	0.012	10 - 12	25.4 - 30.5	0.12	0.47
81461562	213 LP/FF	0.013	4 - 6	10.2 - 15.2	0.15	0.57
81461563	313 LP/FF	0.013	6 - 8	15.2 - 20.3	0.15	0.57
81461564	413 LP/FF	0.013	8 - 10	20.3 - 25.4	0.15	0.57
81461565	513 LP/FF	0.013	10 - 12	25.4 - 30.5	0.15	0.57
81461566	215 LP/FF	0.015	4 - 6	10.2 - 15.2	0.19	0.72
81461567	315 LP/FF	0.015	6 - 8	15.2 - 20.3	0.19	0.72
81461568	415 LP/FF	0.015	8 - 10	20.3 - 25.4	0.19	0.72
81461569	515 LP/FF	0.015	10 - 12	25.4 - 30.5	0.19	0.72
81461570	217 LP/FF	0.017	4 - 6	10.2 - 15.2	0.26	0.98
81461571	317 LP/FF	0.017	6 - 8	15.2 - 20.3	0.26	0.98
81461572	417 LP/FF	0.017	8 - 10	20.3 - 25.4	0.26	0.98
81461573	517 LP/FF	0.017	10 - 12	25.4 - 30.5	0.26	0.98
81461574	617 LP/FF	0.017	12 - 14	30.5 - 35.6	0.26	0.98
81461575	219 LP/FF	0.019	4 - 6	10.2 - 15.2	0.34	1.30
81461576	319 LP/FF	0.019	6 - 8	15.2 - 20.3	0.34	1.30
81461577	419 LP/FF	0.019	8 - 10	20.3 - 25.4	0.34	1.30
81461578	519 LP/FF	0.019	10 - 12	25.4 - 30.5	0.34	1.30
81461579	619 LP/FF	0.019	12 - 14	30.5 - 35.6	0.34	1.30
81461580	421 LP/FF	0.021	8 - 10	20.3 - 25.4	0.40	1.52
81461581	521 LP/FF	0.021	10 - 12	25.4 - 30.5	0.40	1.52
81461582	621 LP/FF	0.021	12 - 14	30.5 - 35.6	0.40	1.52
81461583	423 LP/FF	0.023	8 - 10	20.3 - 25.4	0.48	1.83
81461584	523 LP/FF	0.023	10 - 12	25.4 - 30.5	0.48	1.83
81461585	623 LP/FF	0.023	12 - 14	25.4 - 30.5	0.48	1.83
81461586	723 LP/FF	0.023	14 - 16	35.6 - 40.6	0.48	1.83
81461587	425 LP/FF	0.025	8 - 10	20.3 - 25.4	0.56	2.13
81461588	525 LP/FF	0.025	10 - 12	25.4 - 30.5	0.56	2.13
81461589	625 LP/FF	0.025	12 - 14	30.5 - 35.6	0.56	2.13
81461590	725 LP/FF	0.025	14 - 16	35.6 - 40.6	0.56	2.13
81461591	427 LP/FF	0.027	8 - 10	20.3 - 25.4	0.66	2.50
81461592	527 LP/FF	0.027	10 - 12	25.4 - 30.5	0.66	2.50
81461593	627 LP/FF	0.027	12 - 14	30.5 - 35.6	0.66	2.50
81461594	727 LP/FF	0.027	14 - 16	35.6 - 40.6	0.66	2.50
81461595	429 LP/FF	0.029	8 - 10	20.3 - 25.4	0.78	2.95
81461596	529 LP/FF	0.029	10 - 12	25.4 - 30.5	0.78	2.95
81461597	629 LP/FF	0.029	12 - 14	30.5 - 35.6	0.78	2.95
81461598	729 LP/FF	0.029	14 - 16	35.6 - 40.6	0.78	2.95
81461599	431 LP/FF	0.031	8 - 10	20.3 - 25.4	0.90	3.42
81461601	531 LP/FF	0.031	10 - 12	25.4 - 30.5	0.90	3.42
81461602	631 LP/FF	0.031	12 - 14	30.5 - 35.6	0.90	3.42
81461603	731 LP/FF	0.031	14 - 16	35.6 - 40.6	0.90	3.42

*Flow rate calculated for water at 1,450 psi (100 bar, 10 MPa). FAN WIDTH is measured at 305 mm (12") from the surface.

Airless gun accessories

SPEEDY5

Reversible Airless Spray Tips

Recommended application	TIP	Orificie (inches / mm.)	Spray angle	Fan width	Flow rate	Gun filter	TIP Code
Enamels and paints acrylics and synthetics, oils, mold release agents	**07 / 20** Swivel Sd V	0.007” / 0.18	20°	100-150 mm. (4-6”)	0.18 L/min.	Red	81461102
	07 / 40 Swivel Sd V	0.007” / 0.18	40°	200-250 mm. (8-10”)	0.18 L/min.	Red	81461103
	07 / 50 Swivel Sd V	0.007” / 0.18	50°	250-300 mm. (10-12”)	0.18 L/min.	Red	81461104
	09 / 20 Swivel Sd V	0.009” / 0.23	20°	100-150 mm. (4-6”)	0.25 L/min.	Red	81461105
	09 / 40 Swivel Sd V	0.009” / 0.23	40°	200-250 mm. (8-10”)	0.25 L/min.	Red	81461106
	09 / 60 Swivel Sd V	0.009” / 0.23	60°	300-355 mm. (12-14”)	0.25 L/min.	Red	81461107
Resin-based synthetic paints, PVC paints	**11 / 20** Swivel Sd V	0.011” / 0.28	20°	100-150 mm. (4-6”)	0.37 L/min.	Red	81461108
	11 / 40 Swivel Sd V	0.011” / 0.28	40°	200-250 mm. (8-10”)	0.37 L/min.	Red	81461109
	11 / 60 Swivel Sd V	0.011” / 0.28	60°	300-355 mm. (12-14”)	0.37 L/min.	Red	81461110
Enamels, Plastic paints, Primers, Filling materials	**13 / 20** Swivel Sd V	0.013” / 0.33	20°	100-150 mm. (4-6”)	0.57 L/min.	Red	81461111
	13 / 40 Swivel Sd V	0.013” / 0.33	40°	200-250 mm. (8-10”)	0.57 L/min.	Red	81461112
	13 / 80 Swivel Sd V	0.013” / 0.33	80°	405-457 mm. (16-18”)	0.57 L/min.	Red	81461114
Filling materials, Plastic paints	**15 / 20** Swivel Sd V	0.015” / 0.38	20°	100-150 mm. (4-6”)	0.72 L/min.	Yellow	81461115
	15 / 40 Swivel Sd V	0.015” / 0.38	40°	200-250 mm. (8-10”)	0.72 L/min.	Yellow	81461116
	15 / 80 Swivel Sd V	0.015” / 0.38	80°	405-457 mm. (16-18”)	0.72 L/min.	Yellow	81461118
Anti-corrosion paints, Plastic paints Primers	**17 / 20** Swivel Sd V	0.017” / 0.43	20°	100-150 mm. (4-6”)	0.98 L/min.	Yellow	81461123
	17 / 40 Swivel Sd V	0.017” / 0.43	40°	200-250 mm. (8-10”)	0.98 L/min.	Yellow	81461124
	17 / 60 Swivel Sd V	0.017” / 0.43	60°	300-355 mm. (12-14”)	0.98 L/min.	Yellow	81461125
	17 / 80 Swivel Sd V	0.017” / 0.43	80°	405-457 mm. (16-18”)	0.98 L/min.	Yellow	81461126
	18 / 20 Swivel Sd V	0.018” / 0.45	20°	100-150 mm. (4-6”)	1.10 L/min.	Yellow	81461127
	18 / 40 Swivel Sd V	0.018” / 0.45	40°	200-250 mm. (8-10”)	1.10 L/min.	Yellow	81461128
	18 / 60 Swivel Sd V	0.018” / 0.45	60°	300-355 mm. (12-14”)	1.10 L/min.	Yellow	81461129
	19 / 20 Swivel Sd V	0.019” / 0.48	20°	100-150 mm. (4-6”)	1.30 L/min.	White	81461132
	19 / 40 Swivel Sd V	0.019” / 0.48	40°	200-250 mm. (8-10”)	1.30 L/min.	White	81461133
	19 / 60 Swivel Sd V	0.019” / 0.48	60°	300-355 mm. (12-14”)	1.30 L/min.	White	81461134
	19 / 80 Swivel Sd V	0.019” / 0.48	80°	405-457 mm. (16-18”)	1.30 L/min.	White	81461135
Fire protection Primers	**21 / 20** Swivel Sd V	0.021” / 0.53	20°	100-150 mm. (4-6”)	1.52 L/min.	White	81461137
	21 / 40 Swivel Sd V	0.021” / 0.53	40°	200-250 mm. (8-10”)	1.52 L/min.	White	81461138
	21 / 60 Swivel Sd V	0.021” / 0.53	60°	300-355 mm. (12-14”)	1.52 L/min.	White	81461139
	21 / 80 Swivel Sd V	0.021” / 0.53	80°	405-457 mm. (16-18”)	1.52 L/min.	White	81461140
Interior and exterior coating	**23 / 20** Swivel Sd V	0.023” / 0.58	20°	100-150 mm. (4-6”)	1.83 L/min.	White	81461142
	23 / 40 Swivel Sd V	0.023” / 0.58	40°	200-250 mm. (8-10”)	1.83 L/min.	White	81461143
	23 / 60 Swivel Sd V	0.023” / 0.58	60°	300-355 mm. (12-14”)	1.83 L/min.	White	81461144
	23 / 80 Swivel Sd V	0.023” / 0.58	80°	405-457 mm. (16-18”)	1.83 L/min.	White	81461145
Dense materials, Anticorrosive protection, Putty	**25 / 20** Swivel Sd V	0.025” / 0.63	20°	100-150 mm. (4-6”)	2.13 L/min.	White	81461147
	25 / 40 Swivel Sd V	0.025” / 0.63	40°	200-250 mm. (8-10”)	2.13 L/min.	White	81461148
	25 / 60 Swivel Sd V	0.025” / 0.63	60°	300-355 mm. (12-14”)	2.13 L/min.	White	81461149
	25 / 80 Swivel Sd V	0.025” / 0.63	80°	405-457 mm. (16-18”)	2.13 L/min.	White	81461150
	27 / 20 Swivel Sd V	0.027” / 0.68	20°	100-150 mm. (4-6”)	2.50 L/min.	White	81461152
	27 / 60 Swivel Sd V	0.027” / 0.68	60°	300-355 mm. (12-14”)	2.50 L/min.	White	81461154
	27 / 80 Swivel Sd V	0.027” / 0.68	80°	405-457 mm. (16-18”)	2.50 L/min.	White	81461155
	31 / 40 Swivel Sd V	0.031” / 0.78	40°	200-250 mm. (8-10”)	3.42 L/min.	White	81461163
	31 / 60 Swivel Sd V	0.031” / 0.78	60°	300-355 mm. (12-14”)	3.42 L/min.	White	81461164
	31 / 80 Swivel Sd V	0.031” / 0.78	80°	405-457 mm. (16-18”)	3.42 L/min.	White	81461165
Dense materials, Anticorrosive protection, Putty	**35 / 20** Swivel Sd V	0.035” / 0.89	20°	100-150 mm. (4-6”)	4.30 L/min.	White	81461181
	35 / 40 Swivel Sd V	0.035” / 0.89	40°	200-250 mm. (8-10”)	4.30 L/min.	White	81461182
	35 / 60 Swivel Sd V	0.035” / 0.89	60°	300-355 mm. (12-14”)	4.30 L/min.	White	81461183

*Flow rate calculated for water at 1,450 psi (100 bar, 10 MPa). FAN WIDTH is measured at 305 mm (12”) from the surface.

Airless gun accessories

Fixed Airless Spray Tips

Recommended application	TIP	Orificie (inches / mm.)	Spray angle	Fan width	Flow rate	Gun filter	TIP Code
Enamels and paints acrylics and synthetics, oils, mold release agents, Resin-based synthetic paints, PVC paints	**09 / 20** Fija	0.009” / 0.23	20°	100-150 mm. (4-6”)	0.25 L/min.	Red	81460641
	09 / 40 Fija	0.009” / 0.23	40°	200-250 mm. (8-10”)	0.25 L/min.	Red	81460642
	09 / 60 Fija	0.009” / 0.23	60°	300-355 mm. (12-14”)	0.25 L/min.	Red	81460644
	11 / 40 Fija	0.011” / 0.28	40°	200-250 mm. (8-10”)	0.37 L/min.	Red	81460650
	11 / 60 Fija	0.011” / 0.28	60°	300-355 mm. (12-14”)	0.37 L/min.	Red	81460653
Enamels, Plastic paints, Primers, Filling materials	**13 / 20** Fija	0.013” / 0.33	20°	100-150 mm. (4-6”)	0.57 L/min.	Red	81460661
	13 / 40 Fija	0.013” / 0.33	40°	200-250 mm. (8-10”)	0.57 L/min.	Red	81460662
	13 / 60 Fija	0.013” / 0.33	60°	300-355 mm. (12-14”)	0.57 L/min.	Red	81460665
	13 / 80 Fija	0.013” / 0.33	80°	405-457 mm. (16-18”)	0.57 L/min.	Red	81460666
	15 / 20 Fija	0.015” / 0.38	20°	100-150 mm. (4-6”)	0.72 L/min.	Yellow	81460672
	15 / 40 Fija	0.015” / 0.38	40°	200-250 mm. (8-10”)	0.72 L/min.	Yellow	81460673
	15 / 50 Fija	0.015” / 0.38	50°	250-300 mm. (10-12”)	0.72 L/min.	Yellow	81460674
	15 / 60 Fija	0.015” / 0.38	60°	300-355 mm. (12-14”)	0.72 L/min.	Yellow	81460675
	15 / 80 Fija	0.015” / 0.38	80°	405-457 mm. (16-18”)	0.72 L/min.	Yellow	81460676
Anti-corrosion paints, Plastic paints Primers Fire protection	**17 / 100** Fija	0.017” / 0.43	100°	508-558 mm. (20-22”)	0.98 L/min.	Yellow	81460627
	18 / 40 Fija	0.018” / 0.46	40°	200-250 mm. (8-10”)	1.10 L/min.	Yellow	81460698
	18 / 60 Fija	0.018” / 0.46	60°	300-355 mm. (12-14”)	1.10 L/min.	Yellow	81460701
	18 / 80 Fija	0.018” / 0.46	80°	405-457 mm. (16-18”)	1.10 L/min.	Yellow	81460702
	18 / 90 Fija	0.018” / 0.46	90°	457-508 mm. (18-20”)	1.10 L/min.	Yellow	81460703
	21 / 40 Fija	0.021” / 0.53	40°	200-250 mm. (8-10”)	1.52 L/min.	White	81460714

The **fan size** is indicative and it will vary depending on the viscosity and the pressure at which sprayed.
Others available nozzle and angles. Consult.

At Sagola, we offer a complete range of accessories for use with Sagola high-pressure spray equipment. Filters, hoses, regulators and accessories designed to ensure maximum performance.

Product filters

Product filters for Airless guns.

Code	Description
30010014	Green filter - 30 mesh
30010008	White filter - 50 mesh
30010009	Yellow filter - 100 mesh
30010010	Red filter - 200 mesh
86463004	Filter 100 layers + Filter holder

SPEEDY5

Swivel head

Swivel head for Airless guns.

Code	Gun Models
81461101	PSAM 550 / PSAM 350 / PSAM 104

SPEEDY7

Swivel head

Swivel head for Airless guns.

Code	Gun Models
81461300	PSAM 550 / PSAM 350 / PSAM 104

Airless gun accessories

At Sagola, we offer a complete range of accessories for use with Sagola high-pressure spray equipment. Filters, hoses, regulators and accessories designed to ensure maximum performance.

Airless tip

Adjustable fan pattern.

Code	Description
81460977	Adjustable fan pattern Airless tip 15
81460978	Adjustable fan pattern Airless tip 20

Angular head

Angular head for Airless guns.

Code	Gun Models
30990371	PSAM 550 / PSAM 350 / PSAM 104

Disobturator needles

For Airless gun caps.

Code	Units
30010201	6 uunits

Extensions

Extensions for Airless guns

Code	Description
30010302	30 cm. extension for airless gun
30010303	50 cm. extension for airless gun
30010304	100 cm. extension for airless gun
30010301	15 cm. extension 45° for airless gun

Product hose for electric airless painting equipment

Antistatic product hose (Ø6 x 12.3 mm.) made of Polyamide plus Polyester reinforcement, with an outer coating of Polyurethane. 1/4” swivel connectors.
(Description page 150)

Code	Description
86463802	10 m. product hose with 1/4” terminals
86463803	20 m. product hose with 1/4” terminals

Code	Description
85760301	1/4” F - 1/4” F Airless hose coupling

Product hose for airless painting equipment

Antistatic product hose (Ø6 x 13.8 mm.) made of Polyamide plus double metal reinforcement, with an outer coating of Polyurethane. 3/16” and 1/4” connections. (Description page 149)

Code	Description
86463821	5 m. 3/16” product hose with terminals
86463826	5 m. 1/4” product hose with terminals
86463827	10 m. 1/4” product hose with terminals
86463834	10 m. 1/4” product hose with safety terminals
86463828	15 m. 1/4” product hose with terminals

Airless gun accessories

Oil for pumps

Pump maintenance oil.

Code	Description
30090099	Hydraulic oil RENOLIN MR 10
30090098	OILPACK packing oil

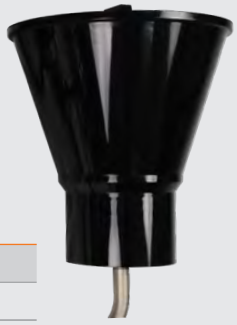

Gravity deposit

5 L. for RAIDER/MACK pumps

Code	Description
30090091	5L Gravity deposit

Absorption probe

for RAIDER/MACK pumps

Code	Description
86465206	MACK 150/320 Absorption Probe Kit
49000741	RAIDER 300 Absorption Probe Kit
56415905	HTV 250 Absorption Probe Kit
83660047	Absorption filter for narrow pass
56418055	40 microns circular filter

Anti-pulsation filter

for RAIDER/MACK pumps

Code	Description
83660009	100 mesh filter
83660010	60 mesh filter

Other accessories

for pneumatic pumps (RAIDER/MACK)

Code	Description
84260099	Drain kit
56418543	Absorption valve
56418485	RAIDER Lower packing kit
56418498	RAIDER Upper packing kit
56418545	MACK Lower packing kit
56418546	MACK Upper packing kit
56418650	RAIDER complete hydraulic kit
56418549	MACK complete hydraulic kit
56418538	MACK 150X Pneumatic shaft kit
56418539	MACK 320X Pneumatic shaft kit
56418652	RAIDER Pneumatic shaft kit

Filters and various accessories

for RAIDER/MACK pumps

Code	Description
83660055	High capacity filter set (1 Liter)
83660058	200 mesh filter
83660056	300 mesh filter
83660057	In line filter with swivel coupling, 100 mesh
30010015	100 mesh microfilter (mixed tips) (10 units)

for electric pumps (ATLANTA)

Code	Description
30090021	Non-return kit
87560003	Absorption valve
56418599	200 PLUS Membrane kit
30090022	500/800 Membrane kit
30090087	500/800 Drain kit
86465204	500/800 Absorption Probe Kit
86464701	200 PLUS Pressure regulator
86464703	500/800 Pressure regulator

04

Product Transfer

At Sagola we have a wide range of solutions for the transfer of oils, chemical products, kerosene, biodiesel, antifreeze...

We offer integral solutions for your installation, from individual pumping systems to complete installations for the distribution of all types of fluids.

Sagola DM 400 pump

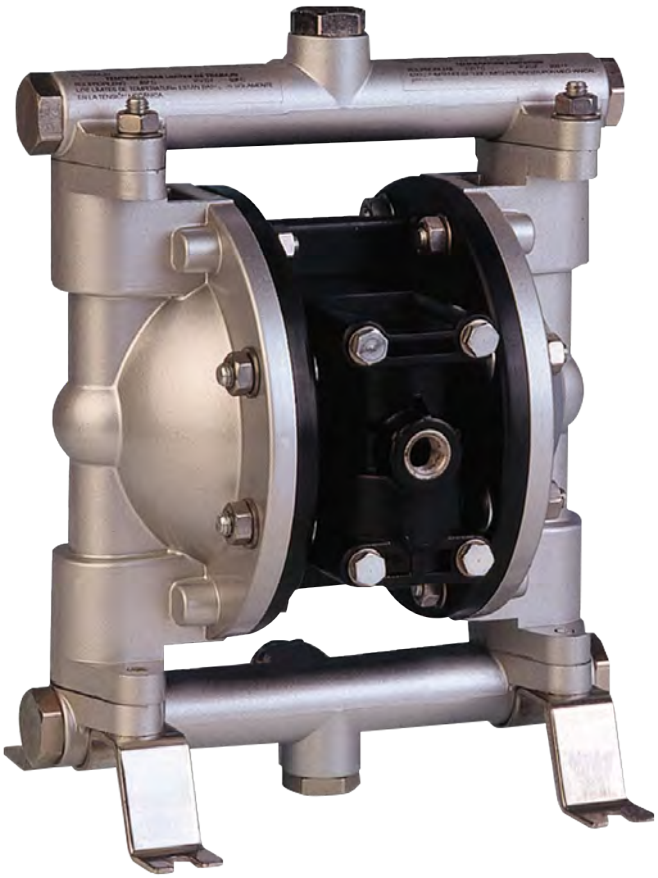

The DM 400 double diaphragm pneumatic pump is specially designed for transferring a wide variety of fluids, mainly medium and low viscosity products.

With a flow rate of 40 L/min. It is capable of handling a wide variety of fluids with solvency: solvents, glues, adhesives, lacquers, paints, dyes, oils...

Good abrasion resistance, chemical and heat resistance. High workload. Membranes made of polypropylene.

Suitable for use in a wide variety of industries such as oil, metallurgical, mining, coatings, wood, printing, water treatment, automotive, etc...

REGULATIONS:
2006/42/CE
ATEX Ex 2 II GX
UNE-EN-13463-1:2011,
UNE-EN ISO 12100:2012,
EN 809, EN12621, EN12162
and EN 1127-1

TECHNICAL DATA

	SAGOLA DM 400	
Weight	4.7 Kilograms	10.36 lbs
Dimensions	22 x 21 x 26 cm.	8.66 x 8.27 x 10.24 “
Maximum air consumption	580 L/min.	20 cfm
Maximum air inlet pressure	7 bar	102 psi
Maximum flow	40 L/min.	1.41 cfm
Air inlet	1/4” BSP F	
Product output	1/2” BSP M	
Maximum operating temperature	50° C	122° F

VERSIONS

Description	Code
Standard version	**30910101**
Abrasives version	**30910102**

Sagola DM 300 pump

The DM 300 double diaphragm pneumatic pump is specially designed for transferring a wide variety of fluids, mainly medium and low viscosity products: solvents, glues, adhesives, lacquers, paints, dyes, oils...

Pneumatic pump with a maximum flow of 30 L/min. Good abrasion resistance, chemical and heat resistance. Membranes made of polypropylene.

The maximum operating pressure of the pump is 7 bar (102 psi).

REGULATIONS:
2006/42/CE
ATEX Ex 2 II GX
UNE-EN-13463-1:2011,
UNE-EN ISO 12100:2012,
EN 809, EN12621, EN12162
and EN 1127-1

TECHNICAL DATA

	SAGOLA DM 300	
Weight	3.3 Kilograms	7.27 lbs
Dimensions	28 x 15 x 27 cm.	11.02 x 5.91 x 10.63 “
Maximum air consumption	380 L/min.	13 cfm
Maximum air inlet pressure	7 bar	102 psi
Maximum flow	30 L/min.	1.06 cfm
Air inlet	1/4” BSP F	
Product output	1/2” BSP M	
Maximum operating temperature	50° C	122° F

VERSIONS

Description	Code
Standard version	**30910105**

Sagola TB 270 X pump

Piston transfer pump. Robust structure to ensure high performance. Great performance with little air consumption. High workload.

Solvents, glues and adhesives, lacquers, paints, dyes, oils, dirty oils, mineral or synthetic oils as well as for antifreeze fluid. In general, low and medium viscosity products.

The Sagola TB 270 X Pump is a pneumatic piston pump for quick assembly in drums and tanks or wall installation.

REGULATIONS:
2006/42/CE, 2014/34/CE
ATEX Ex 2 II GX,
UNE-EN ISO 12100:2012, UNE-EN ISO 4414:2011,
UNE-EN ISO 14120:2016, UNE-EN ISO 1127-1:2012

TECHNICAL DATA

		SAGOLA TB 270 X
Weight TB 270 Long (standard)	5,5 Kilograms	12.13 lbs
Weight TB 270 Short (standard)	5 Kilograms	11.02 lbs
Weight TB 270 Long (stainless steel)	7 Kilograms	15.43 lbs
Weight TB 270 Short (stainless steel)	6.5 Kilograms	14.33 lbs
Dimensions TB 270 Long	10 cm. x 130.5 cm.	3.94 x 51.38 “
Dimensions TB 270 Short	10 cm. x 91 cm.	3.94 x 35.83 “
Maximum air inlet pressure	7 bar	102 psi
Maximum product outlet pressure	7 bar	102 psi
Working temperature limits	2 - 65°C	35.6 - 149°F
Free flow (water viscosity)	60 L/min	2.12 cfm
Maximum air consumption (100 cycles/min.)	230 L/min	8.12 cfm
Air inlet	1/4” BSP Quick coupling	
Product output	Thread BSP 1/2 “ F	
Pump feed air inlet	Thread BSP 1/4 “ F	

VERSIONS

Description	Code
TB 270 X Long (standard, Aluminum)	**30910501**
TB 270 X Short (standard, Aluminum)	**30910502**
TB 270 X Long (Stainless steel)	**30910503**
TB 270 X Short (Stainless steel)	**30910504**

Recipient Lids

Variety of designs for product transfer from a 200 liter drum. From the simplest to the most complete transfer kit.

Lids made of stainless steel. They include grip handles for a comfortable adjustment of the bottle.

Configuration with Sagola elements of high technology and quality. Pneumatic pumps, stirrers, regulators,...

DM 400 pump (page 116)

Sagola TB270 pump (page 118)

Sagola 464 rotary mixer (page 121)

REGULATIONS:
2006/42/CE, UNE-EN 12100:2012
ATEX Ex 2 II GX
UNE EN ISO 80079-36:2017

Code
30990354

Recipient Lid

Lid kit for 200 liter capacity drum with grip handles.

Code
30990359

Recipient Lid + Rotary mixer

Lid kit with **Sagola 464** rotary rmixer**.**

Code
30990358

Recipient Lid + DM Pump + Air inlet regulator

Lid kit including a Sagola **DM 400** pneumatic pump and a high precision air inlet regulator.

Code
30990357

Recipient Lid + TB 270 X Pump + Air inlet regulator

Lid kit including a Sagola **TB270X** piston pump and a high precision air inlet regulator.

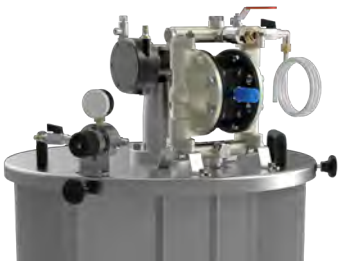

Code
30990356

Recipient Lid + DM Pump + Rotary mixer + Air inlet regulator

Lid kit including a Sagola **DM 400** pneumatic pump, **Sagola 464** rotary rmixer and a high precision air inlet regulator.

Code
30990355

Recipient Lid + TB 270 X Pump + Rotary mixer + Air inlet regulator

Lid kit including a Sagola **TB270X** piston pump, **Sagola 464** rotary rmixer and a high precision air inlet regulator.

RAM 200 Lid elevator

Sagola presents the piloted pneumatic elevator whose purpose is to lift the lids of 200-liter drums that it sells, and to facilitate the change of drum.

Having a pneumatic means greatly facilitates the work of lifting the lid together with all the possible accessories (pumps, mixers...), which together can reach a considerable weight.

Carrying out the work manually can create risks and difficulties that are eliminated by using this elevator.

It consists of a single-acting pneumatic cylinder, and is controlled by a manually operated pneumatic valve.

Body and support made of highly robust steel. High quality of components. With a floor support using M12 bolts for great stability and fixity.

This equipment is intended for professional use only.

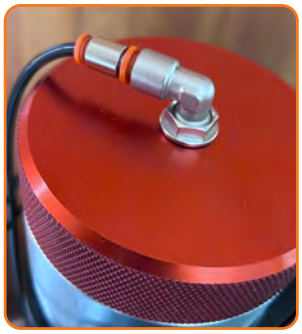

Compressed air inlet

Manual operation valve

REGULATIONS:
2006/42/CE, 2014/68/UE
UNE-EN ISO 12100
ISO 14121

Code
13010000

TECHNICAL DATA

	RAM 200 LID ELEVATOR	
Dimensions	1,556 x 520 x 646 mm.	61.3 x 20.5 x 25.4 “
Maximum height (elevated position)	2,506 mm.	99”
Piston stroke	950 mm.	37.4”
Maximum load of elevation	259.5 Kg.	572 lbs
Air inlet	Swivel coupling pipe Ø4 mm. 1/4”	
Manual pneumatic valve	Manual activation. 3 way, 2 position	
Air inlet working pressure	4 bar	58 psi
Rise time (at 4 bar)	Approx. 12 seconds	
Descent time	Approx. 50 seconds (decompression + descent)	
Lubricant	SAE 20	
Base anchor to the ground	3 screws M12	
Materials	Aluminium, Steel, Polyamide and NBR	

Mixers

Sagola 471/464 mixers with pneumatic drive. Suitable for placement in closed containers such as drums or pressure pots.

For stirring, homogenizing and dissolving aqueous preparations, electroplating, the chemical, beverage and cosmetic industries. Special for low and medium viscosity products.

Made of high quality stainless steel.

The Sagola 463/446 pneumatic motors offer great resistance to effort. Minimum maintenance cost. Robust and compact motor.

REGULATIONS:
2006/42/CE
UNE-EN 12100:2012
ATEX Ex 2 II GX
UNE EN ISO 80079-36:2017

Mixer
Sagola 471

Mixer
Sagola 464

Alternative pneumatic motor
Sagola 463

Rotary pneumatic motor
Sagola 446

VERSIONS	471/463
Description	**Code**
Sagola 471 Mixer	**10520201**
Sagola 463 Alternative pneumatic motor	**10510201**

VERSIONS	464/446
Description	**Code**
Sagola 464 Mixer	**10520101**
Sagola 446 Rotary pneumatic motor	**10510101**

TECHNICAL DATA	R 471 / M 463		R 464 / M 446	
Weight (mixer)	11 Kilograms	24.2 lbs	11 Kilograms	24.2 lbs
Weight (motor)	6 Kilograms	13.2 lbs	5.25 Kilograms	11.6 lbs
Length (mixer blades)	100 cm.	39.4 “	100 cm.	39.4 “
Dimensions (motor)	17 x 16 x 25 cm.	6.7 x 6.3 x 9.8 “	19 x 17 x 14 cm.	7.5 x 6.7 x 5.5 “
Power	4.50 Kgfm (kilogram force meter)		1.2 HP	
Rotation speed	0 - 350 r.p.m. (Includes speed regulator)		0 - 300 r.p.m. (Includes speed regulator)	
Maximum air pressure	6 bar	87 psi	6 bar	87 psi
Work pressure	3 - 6 bar	43.5 - 87 psi	2 - 6 bar	43.5 - 87 psi
Operating temperature	Ambient temperature (max. 50°C) (122°F)		Ambient temperature (max. 50°C) (122°F)	
Air flow at 6 bar (87 psi)	28 L/min.	1 cm	350 L/min.	12.36 cm
Angle of rotation	180°		-	
Air inlet	BSP 1/4 x 19 ” F		BSP 1/4 x 19 ” F	
Air outlet	BSP 1/8 “		BSP 1/8 “	

SAGOLA
HOLDER SP2
VIDA DE SERVICIO
FILTRO PURIFICADOR COALESCENTE
COALESCENT AIR FILTER

05

Air filtering systems

New challenges in painting (new water-based paints), an increase in the number of tools in the industry and more demanding production, a high reliability in the compressed air network is becoming more and more important.

The appearance of regulations related to the drastic reduction of solvents in new paints makes the existence of impurities in the air network increasingly critical for the final results in a good finish.

With the sole objective of achieving the highest degree of finish, finish and shine, at SAGOLA we have worked to the maximum on our line of filters.

5000X range

4000 range

Plus range

Temperature

- General recommendation: Between 15ºC and 25ºC
- At least 5ºC above the dew point of the booth.
- At least 5ºC above the dew point of compressed air.

Dew point

DP < 3ºC	Optimum air quality
3ºC < DP > 7ºC	Good air quality
DP > 7ºC	Poor air quality

Thermohygrometer

content in the
Sagola Air Quality Test.
Measure:
Compressed air temperature.
Compressed air dew point.
Relative humidity of compressed air.

Pack 6000X

Compressed air
temperature regulation

Temperature

Part temperature at least 5ºC
above booth dew point.

Elcometer 319

Measurement of environmental
conditions in the booth and
on the surface

AIR, TEMPERATURE AND HUMIDITY

THE PERFECT BALANCE BETWEEN ALL THE BOOTH ELEMENTS

Sagola's air treatment tools and diagnostic equipment for environmental conditions provide the necessary information to achieve the perfect balance between all the elements of the booth.

Booth filter

Elimination of condensates and vapors of water and oil.
Solid particle retention.

Solids trap

Content in the Sagola Air Quality Test.

Diagnosis of the presence of solid particles, air or oil condensates in the compressed air network.

Air filtering systems

It is necessary to remove the impurities from the compressed air by means of a filter, bearing in mind that the maximum performance must be obtained for the painting job.

SAGOLA FILTERING SYSTEMS guarantee maximum air quality and minimum pressure loss of line.

The air from a compressor which is circulating throughout the line contains particles and solid impurities, water from the relative humidity of the suctioned air and burnt oil from the compressor.

That's why it is necessary to eliminate these impurities with the help of a filter but taking into account that we always have to obtain the maximum performance with the minimum pressure loss.

SAGOLA filtering systems guarantee maximum air quality.

With the recent emergence of the new regulations concerning the drastic decrease of solvents in the new primers, basecoats, HS clearcoats and even in the waterborne paints, the existence of impurities in the compressed air which is used to spray is now more critical for the final results of the bodywork, mainly due to:

- In HS: the high gloss of these paints, their poor proportion of solvents and their decrease in the number of finishing coats make that the small particles proceeding from the compressed air become striking.

- In waterborne paints: their high incompatibility with any oil and organic fumes makes the air quality requirements very high.

Keys for the correct selection of the filter

The type and condition of the installed compressor and the quality of the air it is supplying must be taken into account for the election of a filtration system to install.

For example, If greater air purity is required a model **5200X Coalescent Purifier Regulator** should be installed -with which the following will be eliminated water and solid particles larger than 0.01 microns, water aerosols (C>0.01 mg/m^3) and oil aerosols (C>0.01 mg/m^3)- or a **Purifier regulator with Coalescent Filter plus Active Charcoal model 5300X** -used when it is necessary to eliminate oil, hydrocarbons or water in vapour form , organic fumes are present, foul air, solid particles larger than 0.01 microns and residual oil: maximum 0.003 p.p.m.-.

5000X range filters

Air filters designed and developed for the new technologies of automobile painting. Ideal for waterborne and HS paints.

Maximum air quality

The quality of compressed air is becoming more important every day in production processes. Contaminated air causes damage and manufacturing costs in many cases.

Not only is it important to have good quality compressed air where it may come into contact with the product, it is therefore essential to carry out a quality analysis of the compressed air.

Obtaining a good quality of compressed air is essential for a correct operation of the machines and to achieve an optimal final finish in the production processes.

Minimum pressure loss within the line

For these reasons it is necessary to eliminate impurities by means of a filter, taking into account that the maximum performance with the minimum pressure loss must be obtained.

Ventajas principales

- Air-assisted regulator.
- Rapid discharge; instant pressure reduction.
- Aluminium body. CNC machined for toughness.
- Unmanned discharge of liquids and impurities.
- Maximum flow 2,870 L/min., outlets for 2 guns.
- 8µ filter + Deflector of high capacity of solid and liquids retention.
- 1/2" inch air inlet.
- Filter life control. We incorporate dynamic element of life control.

Complete 5000X Series Filtration System

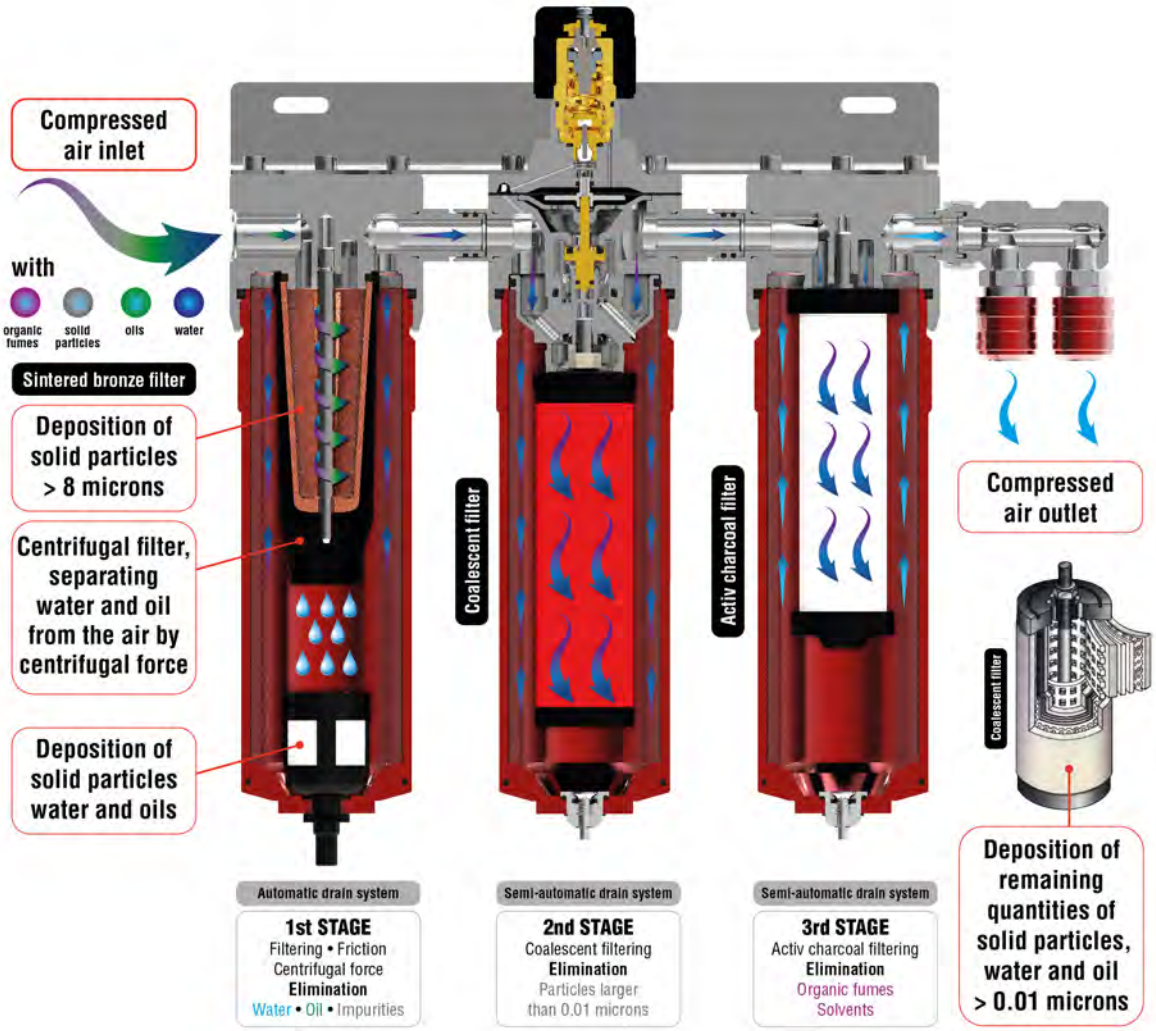

5300X purifying filter

5300X purifying filter

Sagola 5300X filter offers the maximum filtration level in spray booths and painting lines where finishing is highly demanding.

Three filtered stages. Sinterised brass 8 microns pre filtration is incorporated, followed by a 0.01 micron Coalescent filter and final filtration by a wide surface active charcoal filter.

Ideal for waterborne painting lines (and organic vapor problems in the network).

This model eliminates, in addition to water and impurities, organic fumes and foul air.

REGULATIONS:
2006/42/CE
ATEX Ex 2 II GX
UNE EN-13463-1

TECHNICAL DATA

	5300X FILTER		
Weight	6.62 Kilograms	14.59 lbs	
Dimensions	38.3 X 12.3 X 37.2 cm.	15.08 x 4.84 x 14.66 “	
Air flow at 7 bar (101 psi)	2,870 L/min.	101 cfm	
Air outlet connection	BSP 1/4” Female	Air intlet connection	BSP 1/2” Female
Filtering type (3 stages)	**1°** 8 µ Sinterised brass / **2°** 0.01 µ Coalescent filter / **3°** Active charcoal filter		
Maximun working pressure	12 bar	174 psi	
Maximum working temperature	90°C	194°F	
Drain system	1 Automatic drain + 2 Semi-automatic drain		

VERSIONS

Description	Code
5300X air regulator filter with BSP 1/4” US-Mil coupling	**10730305**
5300X air regulator filter with BSP 1/4” Euro-Profile coupling	**10730308**
5300X air regulator filter with BSP 1/4” Nitto (exclusive in Asia) coupling	**10730351**

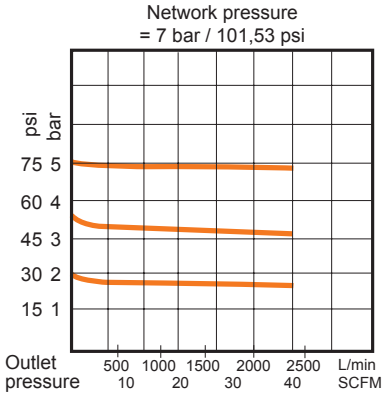

Versatile modular system

If you need to upgrade your system from a standard filter to a coalescing system or upgrade to activated carbon, with the Sagola 5000X modular system you can easily upgrade with a conversion kit.

Made to last with minimal maintenance

Manufactured from machined aluminum with stainless steel couplings, the Sagola 5000X range of filters are incredibly durable.

Options

From pre-filters for moisture separation to coalescing filters to remove particles down to 0.01 microns or active carbon filters for breathing air.

The Sagola 5000X range is available in a number of models to meet the demands of any bodywork.

5300X Plus purifying filter

5300X Plus purifying filter

Filter with the same technical and mechanical features as the 5300X model. Prepared for independent use of activated carbon filtering.

Double coalescing filter outlet for painting or blowing. Simple Active Carbon filter outlet for breathing or painted equipment.

Three filtered stages. Sinterised brass 8 microns pre filtration is incorporated, followed by a 0.01 micron Coalescent filter and final filtration by a wide surface active charcoal filter.

REGULATIONS:
2006/42/CE
ATEX Ex 2 II GX
UNE EN-13463-1

TECHNICAL DATA

	5300X PLUS FILTER		
Weight	6.8 Kilograms	14.99 lbs	
Dimensions	37.7 X 11.9 X 37.2 cm.	14.84 x 4.69 x 14.66 “	
Air flow at 7 bar (101 psi)	2,870 L/min.	101 cfm	
Air outlet connection	BSP 1/4” Female	Air intlet connection	BSP 1/2” Female
Filtering type (3 stages)	**1°** 8 µ Sinterised brass / **2°** 0.01 µ Coalescent filter / **3°** Active charcoal filter		
Maximun working pressure	12 bar	174 psi	
Maximum working temperature	90°C	194°F	
Drain system	1 Automatic drain + 2 Semi-automatic drain		

VERSIONS

Description	Code
5300X Plus air regulator filter with BSP 1/4” US-Mil coupling	**10730306**
5300X Plus air regulator filter with BSP 1/4” Euro-Profile coupling	**10730309**
5300X Plus air regulator filter with BSP 1/4” Nitto (exclusive in Asia) coupling	**10730310**

Filter life controller

Offer a helpful visual reminder of maintenance programs of our filters. The timer is included in each filter kit.

Timer of **3 months**: Active charcoal filter

Timer of **6 months**: Sinterised brass and Coalescent filter.

The filters have a limited useful life in your filtration equipment. When filters becoame clogged, equipment performance can decrease. Therefore, we have no guarantee of 100% correct filtering.

When you start using the filter you must press the “ON” button on the device.

5200X purifying filter

5200X purifying filter

The 5200X model offers the highest technology for air filtering. Two stages of filtering.

Incorporates an 8 micron sinterised brass filter followed by a final 0.01 micron coalescent filter.

Automatic drain system and assisted regulator wheel.

Highly resistant and protective vessels. its draining system reduces maintenance costs due to its greater durability.

It carries out double filtration with optimum flow and pressure regulation, retention of water and impurities achieving an air purity of 99%.

REGULATIONS:
2006/42/CE
ATEX Ex 2 II GX
UNE EN-13463-1

TECHNICAL DATA

	5200X FILTER		
Weight	4.7 Kilograms	10.36 lbs	
Dimensions	27.1 X 12.3 X 37.2 cm.	10.67 x 4.84 x 14.66 “	
Air flow at 7 bar (101 psi)	> 3,000 L/min.	> 106 cfm	
Air outlet connection	BSP 1/4” Female	Air inlet connection	BSP 1/2” Female
Filtering type (2 stages)	**1°** 8 µ Sinterised brass / **2°** 0.01 µ Coalescent filter		
Maximun working pressure	12 bar	174 psi	
Maximum working temperature	90°C	194°F	
Drain system	1 Automatic drain + 1 Semi-automatic drain		

VERSIONS

Description	Code
5200X air regulator filter with BSP 1/4” US-Mil coupling	**10730304**
5200X air regulator filter with BSP 1/4” Euro-Profile coupling	**10730307**
5200X air regulator filter with BSP 1/4” Nitto (exclusive in Asia) coupling	**10730350**

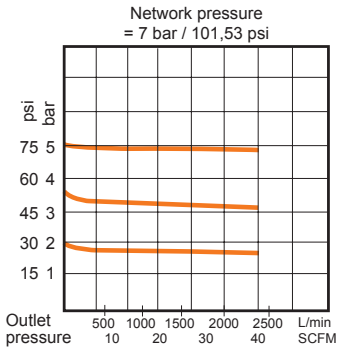

How to change a filter

1. Unscrew lower section

2. Extract filter

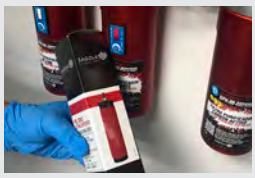

3. Replace spare filter

4. Grease and place lower section

5. Place the timer

5100X / 5050X / 5000X purifying filter

5100X purifying filter

Air purifying filter with pressure regulator and pressure gauge.

Its vessel is tougher and more protective.

5100X filter comes with a new draining system which reduces maintenance costs due to its greater durability.

The filtering system retains water and impurities. Incorporates 8 micron sinterised filter.

5050X purifying filter

The 5050X model is an Purifier Filter with automatic drain system. Ideal for pre-filtering in industrial air lines. Incorporates 8 micron sinterised filter.

Line pre-filter for: medium compressor output (1/2" air inlet), mains level changes, booth input,...

5000X purifying filter

Purifier Filter with regulator, with a perfect price/quality ratio. Ideal for solvent basecoat paint booths and preparation areas.

The 5000X model features a semi-automatic drain system and dual air outlets.

Filtering system that retains water, oil and other impurities. Incorporates a 20 micron filter.

REGULATIONS:
2006/42/CE
ATEX Ex 2 II GX
UNE EN-13463-1

TECHNICAL DATA	5100X		5050X		5000X	
Weight	2.64 Kg.	5.82 lbs	1.95 Kg.	4.30 lbs	2.3 Kg.	5.07 lbs
Dimensions (cm.)	15.9 x 12.3 x 37.3 cm.		11.4 x 11.9 x 33.9 cm.		14.8 x 11.9 x 38.4 cm.	
Dimensions (inchs)	6.26 x 4.84 x 14.65"		4.49 x 4.69 x 13.35"		5.93 x 4.69 x 15.12"	
Air flow at 7 bar (101 psi)	> 3,000 L/min.	> 106 cfm	> 3,000 L/min.	> 106 cfm	> 3,000 L/min.	> 106 cfm
Air outlet connection	BSP 1/4" F		BSP 1/4" F		BSP 1/4" F	
Air inlet connection	BSP 1/2" F		BSP 1/2" F		BSP 1/2" F	
Filtering type	8 µ Sinterised brass		8 µ Sinterised brass		20 µ Sinterised brass	
Maximun working pressure	12 bar	174 psi	12 bar	174 psi	12 bar	174 psi
Maximum working temperature	90°C	194°F	90°C	194°F	90°C	194°F
Drain system	Automatic drain		Automatic drain		Semi-automatic drain	

VERSIONS	5100X	5050X	5000X
Description	**Code**	**Code**	**Code**
Air regulator filter BSP 1/4" US-Mil coupling	**10730202**	**10720301**	**10730204**
Air regulator filter BSP 1/4" Euro-Perfil coupling	**10730206**	**10720302**	**10730205**
Air regulator filter BSP 1/4" Nitto (exclusive in Asia) coupling	**10730208**	**10720303**	**10730207**

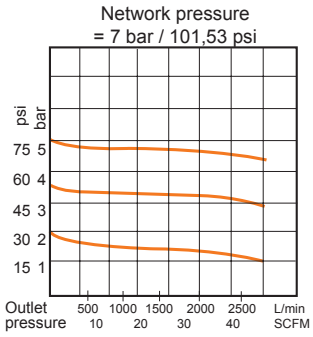

5000X range filters accessories

The filters have a limited useful life in your filtration equipment. When filters become clogged, equipment performance can decrease. Therefore, we have no guarantee of 100% correct filtering.

5000X filters Kit

Replacement filter kit for 5000X filters.
Includes timer.

Code	Description
56418719	Sintered bronze filter kit
56418071	Coalescent filter Kit
56418070	Active Carbon filter kit

(Includes timer)

5000X filters Kit

20 µ porous bronze filter.
Replacement for 5000X filter.

Code
56418720

Gaskets Kit

Code	Models
56418537	5300X / 5300X+

5000X Manometer

High quality and precision 5000X manometer.

Code
54550016

Double outlet Kit

Couplings US- Mil.

Code
56418704

Filter life controller

Offer a helpful visual reminder of maintenance programs of our filters.

The timer is included in each filter kit.

- Timer of 3 months (Active charcoal filter)
- Timer of 6 months (Sinterised brass and Coalescent filter)

Automatic drain Kit

Code	Models
56450010	5050X / 5100X / 5200X / 5300X / 5300X+

Semi-automatic drain Kit

Code	Models
56418533	5000X

Displays 5000X filters range

Code	Description
70000005	Display filter support 5100X
70000006	Display filter support 5300X / 5200X

5000X range filters accessories

If you need to upgrade your system from a standard filter to a coalescing system or upgrade to activated carbon, with the Sagola 5000X modular system you can easily upgrade with a conversion pack.

Coalescent filter coupling

Coupling to convert a 5100X to a 5200X filter.

The definitive solution to problems with solid particles. It incorporates a wide surface coalescent filter. Increase of efficiency up to 0.01 microns. Semi-automatic drain system (+ the automatic drain system of 5100X).

Code
56418521

Active charcoal filter coupling

Coupling to convert a 5200X to a 5300X filter.

The best solution to problems of contaminating particles and organic fumes in the air network. It incorporates a wide surface active charcoal cartridge. Semi-automatic drain system (+ 2 drains coming with 5200X).

Code
56418520

Air quality test equipment

Equipment for the detection of air impurities, humidity level and temperature. It incorporates air quality test equipment with inlet regulator, flashlight with magnifying glass of 30 magnification for visualization of impurities, humidity meter and digital temperature.

It incorporates membrane filter kit, pore 0.45µ (50 units).

Code	Description
15020001	Air quality test Sagola case
49000740	Membrane filter kit. Pore 0.45 µ 50 units.

Pack 6000X Air Heater

The **Sagola Pack 6000X Air Heater** system heats compressed air to a constant working temperature to ensure a stable painting process and a reduction in dew point temperature.

Maximum air quality all year round. Regardless of environmental conditions, the Pack 6000X Air Heater supplies compressed air used in painting processes at a constant temperature, even when there are large temperature differences between day and night, winter and summer.

Heating the compressed air reduces its relative humidity avoiding condensation problems in cold and humid climates.

The use of this equipment provides a finish of optimum surface quality. Maintains a constant temperature in the compressed air, as required for the application of certain types of products.

REGULATIONS:
89/392/CE
2006/95 CE, 2006/42 CS
y 2004/108 CE

TECHNICAL DATA

			PACK 6000X
Weight		3.6 Kg.	7.4 lbs
Dimensions		40,5 X 9,2 X 25,5 cm.	15.9 x 3.6 x 10.04“
Maximum air flow at 7 bar		750 L/min.	26.48 cfm
Maximun working pressure		12 bar	174 psi
Maximum electrical consumption		800 w	
Power		240V/50Hz - 110V/60Hz	
Working temperature range	Clearcoats	40-60°C	104-140°F
	Waterborne	30-50°C	86-122°F
	Solvent basecoats	30-40°C	86-104°F

VERSIONS / ACCESSORIES

Description	Code
Sagola Pack 6000X Air Heater 220V - 50Hz	**10780102**
Sagola Pack 6000X Air Heater 110V - 60Hz	**10780104**
11 m. Heated air hose Ø10 x 18 mm. 220V - 50Hz	**56414030**
11 m. Heated air hose Ø10 x 18 mm. 110V - 60Hz	**56414031**

Easy to use

Light, small and easy to install. The Pack 6000X is equipped with a digital PID temperature controller and a push button LED display with red and green indicators to identify when the selected temperature has been reached.

Cool Touch case

Cold air enters the pressurized chamber cooling the outer casing of the equipment, keeping it isolated from the hot chamber inside, ensuring the Pack 6000X is safe to the touch.

Pack 6000X Air Heater

Air heater main parts

01 **CONTROLS**

02 **NETWORK SWITCH**

03 **RED LED PILOT (Heating)**

03 **GREEN LED PILOT (Ready)**

04 **TEMPERATURE SENSOR**

05 **FLOW SWITCH**

06 **COLD AIR CHAMBER** (Unpressurized)

07 **HOT AIR CHAMBER** (Pressurized)

08 **AIR INLET** (from network or filter)

09 **AIR OUTLET** (to hose)

10 **ELECTRIC CONNECTION** (Heated hose)

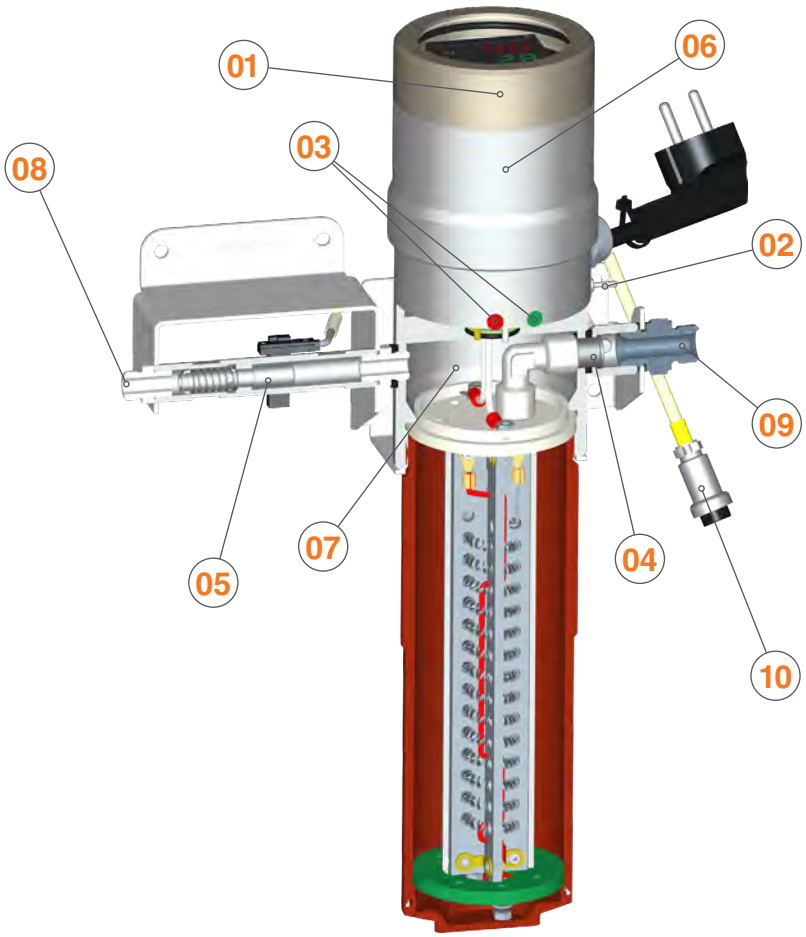

Digital temperature display PID

Termopar Temperature sensor

Self-learning function

Overheating protection

Automatic activation by flow switch

Pack 6000X Air Heater Advantages

- Temperature stability both in the compressed air and the final painting elements such as hose and spray gun.
- Stable painting process in areas with large temperature changes between day and night, winter and summer.
- Constant working temperature.
- Compact and robust.
- Digital temperature display.
- Cold touch, thermal insulation.
- Easy to use; power button and temperature controller.
- Out of the cabin installation.
- Right temperature in the spray gun almost immediately.

Includes an insulated heated hose for maximum energy efficiency.

Heated hose system. Independent of ambient temperature.

The Sagola Pack 6000X is supplied with a specially designed heated antistatic hose to prevent heat loss from the air before it reaches the aircap.

Digital temperature display

Quality filtering

Effective solution for filtering compressed air in professional paint booths

The **Sagola 4000 air filtration** system is the effective solution for filtering compressed air in professional paint booths for: car repainting, wood, machinery, plastics and industry in general.

Complete Filtration System
4000 Series

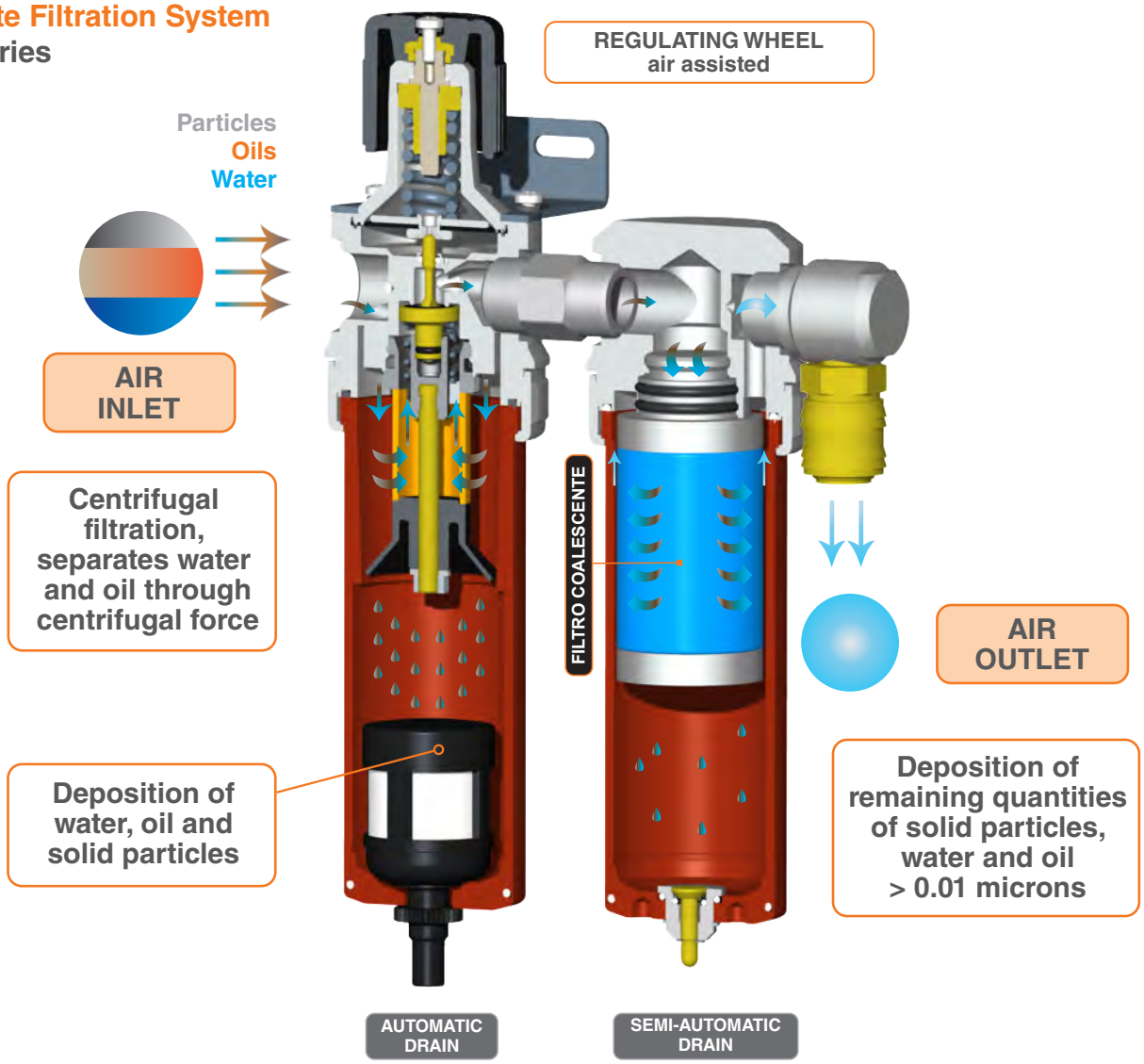

4000 range Purifying Filters

In order to choose the filter system we shall install in our shop, we must take into account the type of air compressor we have, its condition and the quality of the air it is supplying.

In case we are looking for a high quality filtration of particles, water and oil, for painting in a booth and to get a good finish, the filter 4120 would be suitable for primers, lacquers, clearcoats and enamels.

To get the highest performance and finishing quality with waterborne paints and High Solid (HS) products, we may need even more pure air that contains no particles at all.

In that case we have to install a coalescent filter and regulator, that is, the 4220. With this filter system we will eliminate any solid particle down to 0.01 microns, water aerosols (C>0.01 mg/m³) and oil aerosols (C>0.01 mg/m³).

Air filters designed and developed for new car painting technologies. Ideal for waterborne and HS paints.

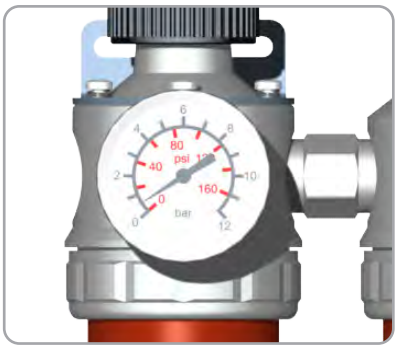

High quality, easy to read manometer. Scale in bar and psi.

Easy and simple to use. Tool-free disassembly.

Automatic drain system. Automatic drain of condensed liquids without manipulation.

Maximum air quality

Professional line of air filters and regulators that offers maximum filtration, good performance and resistance, with the best price/quality ratio. The SAGOLA 4000 range removes humidity and oil down to 0.01 microns and ensures minimal air pressure drop (maximum airflow: 1,700 L/min.)

Precision control

Easy to read pressure gauge with double scale, in bar and psi. High-precision regulation system with a large regulation handle. This makes it easy to handle, even with gloved hands.

Reliable and easy to maintain

Made of machined aluminum with an anticorrosive treatment on the entire surface. The 4000 filter range is highly durable and requires minimal maintenance.

Automatic drain system

The combination of automatic drain in the first stage and semi-automatic in the second means that the level of condensate inside the filter is kept at very low levels.

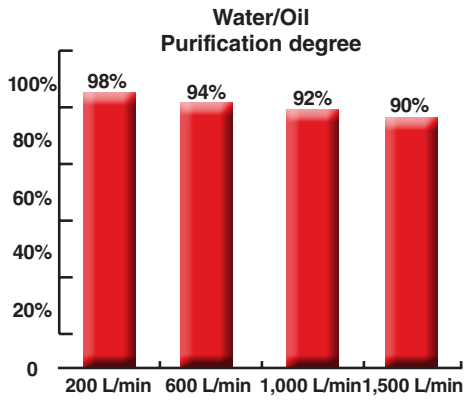

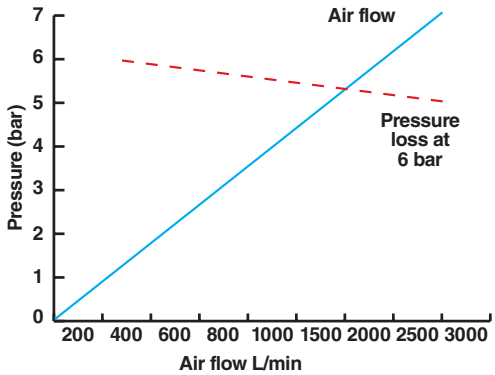

Sagola 4220 Plus purifying filter

Sagola 4220 Plus purifying filter

Two stage air filter. Maximum filtering level. Recommended for last generation finishes. Waterborne paints, HS clearcoats and enamels, high gloss lacquers.

Highly reliable air regulation system. Regulating wheel for a better fit, even with gloves.

Manufactured from a solid aluminum block. Very robust, but light.

1st Stage. Filtration of water, oil and particles + 2nd Stage Submicron Filtering. 0.01 Microns.

Incorporates automatic purge of condensed liquids. High air flow.

Quality pressure gauge and easy to read.

REGULATIONS:
2006/42/CE
ATEX Ex 2 II GX
UNE EN-13463-1

TECHNICAL DATA

	4220 / 4220 PLUS FILTER	
Weight (with quick coupling)	2 Kg.	4.4 lbs
Weight (without quick coupling)	1.8 Kg.	3.96 lbs
Dimensions (without quick coupling)	17.8 X 11.7 X 27.9 cm.	7.01 x 4.61 x 10.98“
Air flow	2,415 L/min.	85 cfm
Air outlet connection	BSP 1/4” Female	
Air inlet connection	BSP 1/2” Female	
Filtering type (2 stages)	**1st** 24 µ Bronze filter / **2nd** 0.01 µ Coalescent filter	
Maximun working pressure	10 bar	145 psi
Maximum working temperature	90°C	194°F
Drain system	1 Automatic drain + 1 Semi-automatic drain	

VERSIONS

Description	Code
4220 Air regulator filter	**10750401**
4220 Plus Air regulator filter with BSP 1/4” US-Mil coupling	**10750402**
4220 Plus Air regulator filter with BSP 1/4” Euro-Profile coupling	**10750404**
4220 Plus Air regulator filter with BSP 1/4” Nitto coupling (exclusive in Asia)	**10750403**

Quick couplings and connectors

Made of tempered steel with nitrile butadiene gasket, safe and hermetic closing system. Available in Euro-profile, US-Mil, Multi-profile and Nitto systems. Silicone-free joints. (See page 152)

Antistatic air hoses

Highly flexible and lightweight antistatic hose. Fastening hardware for maximum security. 8mm inner diameter, enough for any spraygun model. (See page 146)

Sagola 4120 Plus purifying filter

Sagola 4120 Plus purifying filter

Effective solution for compressed air filtration in professional paint booths for: car refinish, wood, machinery, plastics and industry in general.

Highly reliable air regulation system. Regulating wheel for a better fit, even with gloves.

Manufactured from a solid aluminum block. Very robust, but light.

Incorporates automatic purge of condensed liquids. High air flow. High quality manometer.

Water, oil and particulate removal by 24 micron sintered bronze filter. Friction and centrifugation filtering.

REGULATIONS:
2006/42/CE
ATEX Ex 2 II GX
UNE EN-13463-1

TECHNICAL DATA

	4120 / 4120 PLUS FILTER	
Weight (with quick coupling)	1.22 Kg.	2.69 lbs
Weight (without quick coupling)	1.015 Kg.	2.24 lbs
Dimensions (without quick coupling)	9.7 X 11.7 X 27.9 cm.	3.82 x 4.61 x 10.98“
Air flow	2,910 L/min.	103 cfm
Air outlet connection	BSP 1/4” Female	
Air inlet connection	BSP 1/2” Female	
Filtering type	**1st** 24 µ Bronze filter	
Maximun working pressure	10 bar	145 psi
Maximum working temperature	90°C	194°F
Drain system	Automatic drain	

VERSIONS

Description	Code
4120 Air regulator filter	**10730501**
4120 Plus Air regulator filter with BSP 1/4” US-Mil coupling	**10730502**
4120 Plus Air regulator filter with BSP 1/4” Euro-Profile coupling	**10730504**
4120 Plus Air regulator filter with BSP 1/4” Nitto coupling (exclusive in Asia)	**10730503**

Mechanized body from solid aluminum

No diecast parts inside. High strength elements. Longer durability. Oversized air holes, bigger air flow and minimum pressure drops.

Machined aluminum vessel

High resistance anodized. Maximum durability. Minimum maintenance.

Oversized regulating wheel

Easy to use, even with gloves.

Anodized to avoid rusting

Not painted. Anodizing makes it to last longer. Very high resistance to rusting and any other chemical attack.

High quality and easy to read manometer

Double scale: bar and psi.

Automatic draining system

Automatic drain of condensed liquids without any handling.

Accessories for 4000 range filters

The filters in your filter equipment have a limited useful life. When filters become clogged, equipment performance can decrease. Therefore, we do not have a guarantee of 100% correct filtering.

Sintered bronze filter 20 µ

20 µ porous bronze filter, replacement for model 4120/4220 filter.

Code	Models
56418721	4120/4220

Coalescent filter

0.01 µ coalescing filter, replacement for model 4220 filter.

Code	Models
56418722	4220

Double outlet kit

US- Mil couplings.

Code
56418704

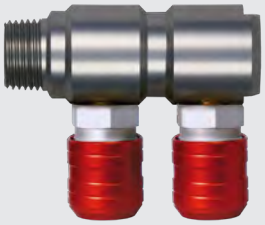

Gasket Kit

Code	Models
56418587	4120
56418588	4220

Automatic drain kit

Code	Models
56450010	4220

Semi-automatic drain kit

Code	Models
56418533	4120/4220

Vessel + automatic drain kit

Code	Models
56417711	4120
56417712	4220

Display

Code	Models
70000007	4220

Gauge 4000

High quality and precision pressure gauge 4000.

Code
54550016

Plus range filters

Sagola professional range in regulators, air purifiers, and air lubricators. Plus range has been exclusively designed and manufactured for professional use, it gathers high standard in performance and design.

Solid and mecanized aluminium body

We do not use cast parts. Sturdy elements. High durability. Over air paths size offering higher flow and minimum pressure drop.

Anodising treatment against oxidation

Painting to protect elements is avoided. This gives us endless life. Very high resistance to oxidation or other chemical attack.

Easy reading pressure gauge

Double scale bar/psi gauge.

Semi-automatic draining systems

No manual draining.

Regulation handle

Oversized. Easy manipulations, even with gloves.

Policarbonate vessel

High-resistant and high transparency. Does not yellow over time.

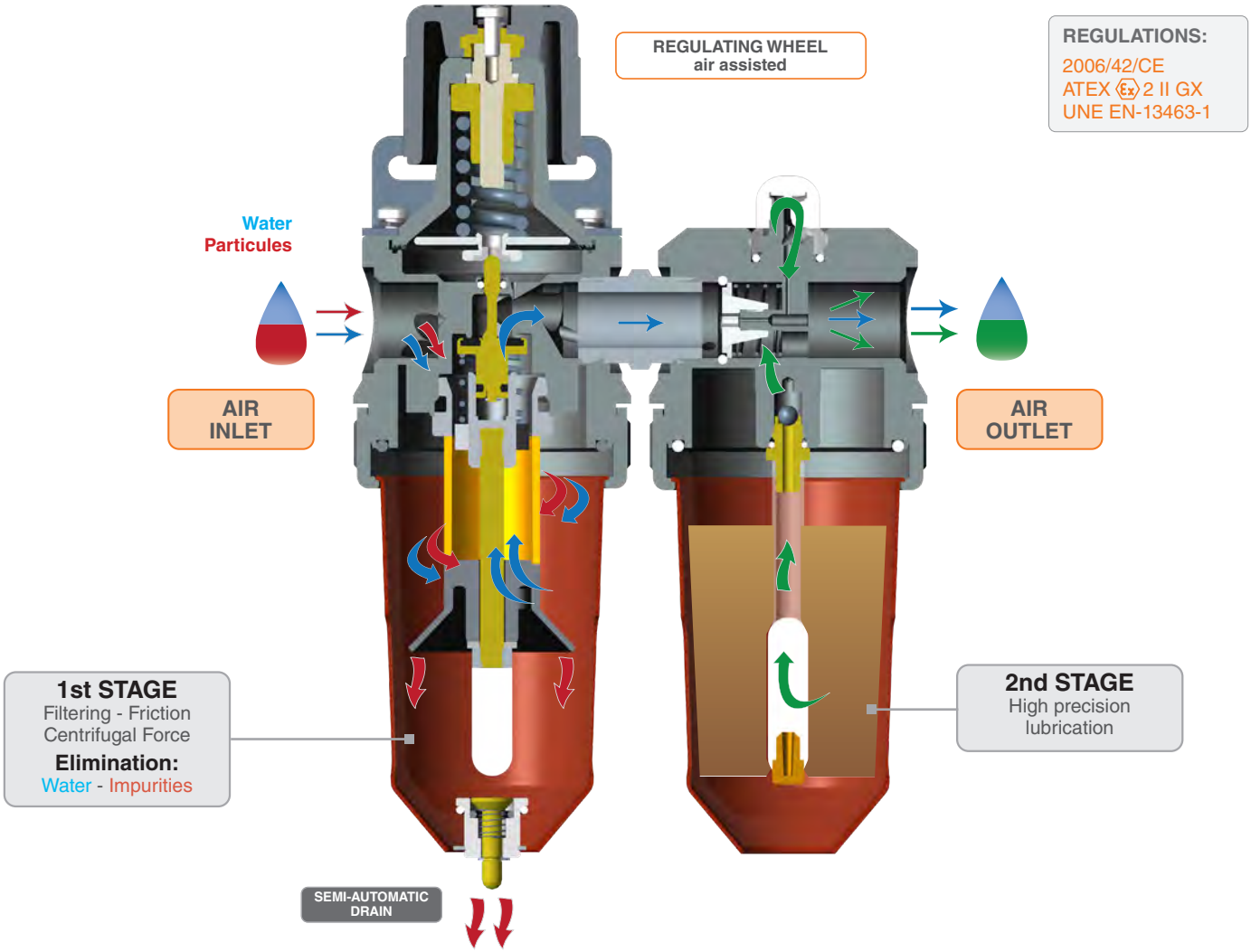

The **Plus filter range** lubrication system offers maximum smoothness of operation, maximum precision. Easy release, automatic pressure drop.

Air assisted regulator and continuous air supply.

Aluminium body. CNC mechanized. Sturdy build. Liquid and impurities holding.

Plus range filters

Sagola 479 Plus Filter

The most compact solution for the small workshops, industry or priming and preparation areas.

Large air flow, maximum reliability regulating system, high quality pressure gauge, the best materials. Don't undervalue your small painting works or reduce the life of your pneumatic tools by using poor quality regulators and no filtration capacity.

Adaptable to any size of hose. It comes with reducers. Produced from a solid aluminium block, great filtrating capacity with check window for waste particle and semi-automatic drain system, it has everything in a minimum space.

Sagola 970 Plus Filter

The virtues of the regulator-filter 479+ is now linked to a lubricating element, setting itself apart as specific workshop equipment. It supplies clean, lubricated air to all your pneumatic tools.

Accurate control of the oil content by means of a "drop-by-drop" hand regulator, zero pressure loss thanks to the in-line design, maximum reliability and productivity in the most compact package.

Assure the supply of clean air and properly lubricated to tools and pneumatic engines.

TECHNICAL DATA	479 PLUS		970 PLUS	
Weight	0.72 Kg.	1.58 lbs	1.24 Kg.	2.72 lbs
Dimensions	22.5 x 6.5 x 8.5 cm	8.86 x 2.56 x 3.35"	22.5 x 14 x 8.5 cm	8.86 x 5.5 x 3.35"
Air flow at 2 bar (29 psi)	1,700 L/min.	60 cfm	1,920 L/min.	68 cfm
Connections	1/2", 3/8", 1/4"		1/2", 3/8", 1/4"	
Filtering type	**1st** 40 µ bronze filter		**1st** 40 µ bronze filter	
Maximun working pressure	10 bar	145 psi	10 bar	145 psi
Maximum working temperature	90°C	194°F	90°C	194°F
Drain system	Automatic drain		Semi-automatic drain	

VERSIONS

Description	Code
479 Plus air regulator filter with 1/2" connection	**10730401**
479 Plus air regulator filter with 3/8" connection	**10730402**
479 Plus air regulator filter with 1/4" connection	**10730403**
970 Plus air lubricator regulator filter with 1/2" connection	**10750301**
970 Plus air lubricator regulator filter with 3/8" connection	**10750302**
970 Plus air lubricator regulator filter with 1/4" connection	**10750303**

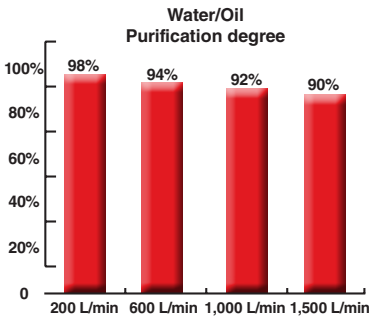

Plus range filters

Sagola 430 Plus regulator

Mini air regulator. Small, robust, reliable and long lasting. Mechanized from a solid aluminium block.

Diaphragm regulator from 0 to 10 bar. High pressure regulator. Quality pressure gauge up to 10 bar. Double scale bar/psi.

Stand included for assembly on the wall. Standard adaptors and fittings included. Quick release and short shift wheel.

Sagola 439 Plus Filter

High flow filter for insertion in air lines. Suitable for all type of installations, accessories included. Made of aluminium. High-durability.

Check window for waste liquids. Semi-automatic drain system. Minimum pressure loss.

Minimum maintenance.

Sagola 437 Plus Lubricator

Ideal for the proper lubrication of pneumatic tools. Multiple inlet and outlet dimensions (1/2", 3/8" and 1/4"). Oil level check window.

Manual oil regulator by level check window, "drop by drop" system. CNC mechanized from a solid aluminium block. Made of aluminium, as the whole Plus range.

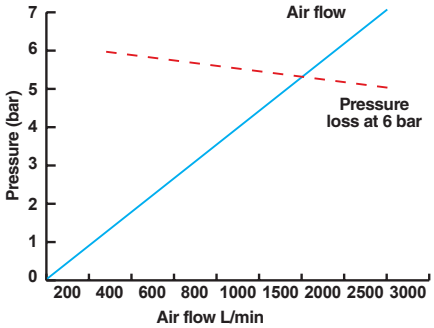

TECHNICAL DATA	430 PLUS		439 PLUS		437 PLUS	
Weight	0.54 Kg.	1.19 lbs	0.55 Kg.	1.21 lbs	0.48 Kg.	1.06 lbs
Dimensions	10.7 x 6.5 x 11.5 cm 4.21 x 2.56 x 4.53"		15.8 x 7.3 x 7.3 cm 6.22 x 2.87 x 2.87"		16.5 x 7.3 x 7.3 cm 6.50 x 2.87 x 2.87"	
Air flow at 2 bar (29 psi)	1,200 - 1,700 L/min.	42 - 60 cfm	1,280 L/min.	45 cfm	1,920 L/min.	68 cfm
Connections	1/2", 3/8", 1/4"		1/2", 3/8", 1/4"		1/2", 3/8", 1/4"	
Filtering type	-		**1st** 40 µ bronze filter		-	
Maximun working pressure	10 bar	145 psi	10 bar	145 psi	10 bar	145 psi
Maximum working temperature	90°C	194°F	90°C	194°F	90°C	194°F
Drain system	-		Semi-automatic drain		Semi-automatic drain	

VERSIONS

Description	Code
430 Plus micro air regulator with 1/2" connection	**10740501**
430 Plus micro air regulator with 3/8" connection	**10740502**
430 Plus micro air regulator with 1/4" connection	**10740503**
439 Plus air filter with 1/2" connection	**10720401**
439 Plus air filter with 3/8" connection	**10720402**
439 Plus air filter with 1/4" connection	**10720403**

VERSIONS

Description	Code
437 Plus Lubricator with 1/2" connection	**10710301**
437 Plus Lubricator with 3/8" connection	**10710302**
437 Plus Lubricator with 1/4" connection	**10710303**

06

Compressed Air

Antistatic hoses, connectors, quick couplings, racords, elements that complement a good tool with quality and safe work for the painter and and panel beater.

SSAGOLA knows that it is not worth taking risks and takes maximum care of this range.

Air hoses

Anti-static air hose

Anti-static compressed air hose ideal for painting in the booth. Light, flexible and manageable. Twist free.

EPDM rubber hose with exterior textile reinforcement

High security crimped ends able to bear the high temperatures of the booth. No need to use flanges, avoiding that they release or cause leaks due to dilation.

8 mm. inner diameter. Valid to work with high flow HVLP sprayguns.

1/4" F couplings with conical closure and flare fitting for easy assembly of the push connector.

REGULATIONS:
97/23/CE
UNE EN-559

TECHNICAL DATA — ANTI-STATIC AIR HOSE

Temperature range	-40°C to 120°C	-40°F to 248°F	
Maximun working pressure	20 bar	290 psi	
Breakage pressure	80 bar	1,160 psi	
Material (inside)	EPDM (Ethylene Propylene Diene type M ASTM)		
Material (outside)	Textile reinforcement	Colour	Blue
Connections	BSP 1/4" F couplings with conical closure and flare fitting		
Conducting pipe	< 1 M Ω		

VERSIONS

Description	Code	US-Mil Code	Euro-Profile Code
6 m. Anti-static air hose Ø 8 x 15 mm.	56414024	-	-
11 m. Anti-static air hose Ø 8 x 15 mm.	56414025	56414047	56414049
16 m. Anti-static air hose Ø 8 x 15 mm.	56414027	56414048	56414050
26 m. Anti-static air hose Ø 8 x 15 mm.	56414026	-	-

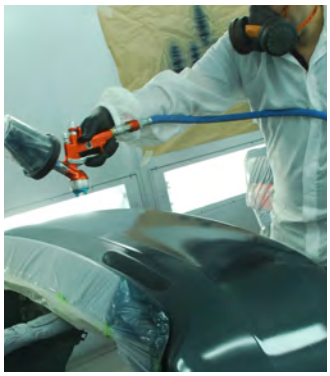

Air hose

Multi-use hose. Compact with excellent performance and oil resistance. 8 x 15 mm. hose in different lengths and in rolls of 100 meters. Made of Thermorubber with external Polyester reinforcement. 8 mm. inner diameter. Valid to work with high flow HVLP sprayguns.

REGULATIONS:
97/23/CE

Working pressure: 20 bar (60 bar of breakage pressure).

Temperature range: de -15°C to 60°C

VERSIONS

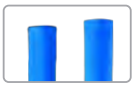

Description	Code	US-Mil Code	Euro-Profile Code
100 m. Air hose roll Ø 8 x 15 mm.	52450008	-	-
11 m. Air hose Ø 8 x 15 mm.	-	56414051	56414053
16 m. Air hose Ø 8 x 15 mm.	-	56414052	56414054

Air hose with connections available in 11 and 16 m.

Air and product hoses

Air and product hose set

Hose set for low pressure pneumatic pumps.

6 x 8 mm. Nylon product hose with quick connect terminals. Adapter 3/8 ” female for pressure sprayguns.

EPDM rubber anti-static air hose 8 x 15 mm. with high security crimped ends 1/4 ” F.

Nylon protective cover of high resistance to friction and abrasion.

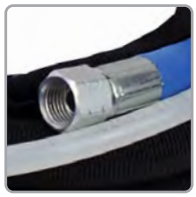

REGULATIONS:
97/23/CE
UNE EN-559

REGULATIONS:
Air hose: 97/23/CE, UNE EN-559
Product hose: DIN 73378
Cover: RoHS, ISO 6945, MSHA

TECHNICAL DATA

AIR AND PRODUCT HOSE SET

Temperature range (hoses)	-20°C to 60°C	-4°F to 140°F
Temperature range (cover)	-60°C to 125°C	-76°F to 257°F

	Product hose	Air hose	Cover
Maximun working pressure	18 bar (261 psi)	20 bar (290 psi)	-
Breakage pressure	-	60 bar (870 bar)	-
Material (inside)	Polyamide PA12	EPDM	Polyester
Material (outside)	Polyamide PA12	Textile reinforcement	Polyester
Colour	White	Blue	Black
Anti-static	-	OK	-
Connections	3/8” coupling	1/4” coupling	-

VERSIONS

Description	Code
1.8 m. Hose set. Ø 8 x 15 mm. air hose and Ø 6 x 8 mm. product hose + protective cover	56414130
5 m. Hose set. Ø 8 x 15 mm. air hose and Ø 6 x 8 mm. product hose + protective cover	56414039
7.5 m. Hose set. Ø 8 x 15 mm. air hose and Ø 6 x 8 mm. product hose + protective cover	56414044
10 m. Hose set. Ø 8 x 15 mm. air hose and Ø 6 x 8 mm. product hose + protective cover	56414040
15 m. Hose set. Ø 8 x 15 mm. air hose and Ø 6 x 8 mm. product hose + protective cover	56414041
20 m. Hose set. Ø 8 x 15 mm. air hose and Ø 6 x 8 mm. product hose + protective cover	56414042

Hoses for Mixed Equipment

Set of high pressure hoses

Set of special hoses for painting with mixed airbrush equipment. Great resistance to high pressures.

Polyurethane air hose 8 x 10 mm. with M16 connection terminal. 6 x 8mm. in X versions, for quick connection of the hose to the gun.

3/16" Polyamide product hose (Ø 4 x 10.4 mm.) with 1/4"F swivel union.

Nylon protective cover with high resistance to friction and abrasion.

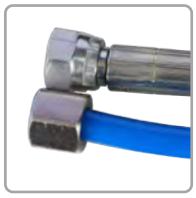

REGULATIONS:
Air hose: 97/23/CE, NF E49-101, ATEX
Product hose: DIN EN 11 27-2, DIN 8028 - 6.3, BGR 132 - 3.3.5, ATEX 2014/34/EU II 2G cT5
Cover: RoHS, ISO 6945, MSHA

TECHNICAL DATA — MIXED HOSE

Temperature range (product hose)	from -40°C to 95°C	from -40°F to 203°F
Temperature range (air hose)	from -15°C to 70°C	from 5°F to 158°F
Temperature range (cover)	from -60°C to 125°C	from -76°F to 257°F

	Product hose	Air hose	Cover
Maximun working pressure	250 bar (3,626 psi)	12 bar (174 psi)	-
Burst pressure	330 bar (4,786 psi)	-	-
Material (inside)	Polyamide PA12 + textile	Polyurethane	Polyester
Material (outer)	Polyurethane	Polyurethane	Polyester
Color	Blue	Blue	Black
Antistatic	OK	NO	NO
Connections	1/4" swivel coupling	M16 (standard version)	-

VERSIONS — STANDARD VERSION

Description	Code
5 m. Set of Air hose Ø 8 x 10 mm. (M16) and Product hose 3/16" (swivel coupling 1/4") + protective case	86463804
7 m. Set of Air hose Ø 8 x 10 mm. (M16) and Product hose 3/16" (swivel coupling 1/4") + protective case	86463869
10 m. Set of Air hose Ø 8 x 10 mm. (M16) and Product hose 3/16" (swivel coupling 1/4") + protective case	86463805
15 m. Set of Air hose Ø 8 x 10 mm. (M16) and Product hose 3/16" (swivel coupling 1/4") + protective case	86463806

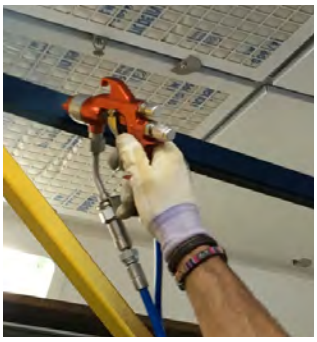

VERSIONS — VERSION WITH QUICK CONNECTION

Description	Code
7 m. Set of Air hose Ø 6 x 8 mm. with quick connection and Product hose 3/16" (swivel coupling 1/4") + protective case	56414036
11 m. Set of Air hose Ø 6 x 8 mm. with quick connection and Product hose 3/16" (swivel coupling 1/4") + protective case	56414037

Hoses for Airless Equipment

Airless product hose

Antistatic product hose for high pressure airless pneumatic pumps.

Polyurethane hose with Polyamide exterior and metallic reinforcement.

1/4" F swivel fittings. Prepared to withstand the high pressures of Airless painting.

Dimensions Ø 6 x 11.7 mm.

REGULATIONS:
DIN EN 11 27-2, DIN 8028 - 6.3,
BGR 132 - 3.3.5,
ATEX 2014/34/EU II 2G cT5

TECHNICAL DATA — AIRLESS PRODUCT HOSE

Temperature range	from -40°C to 98°C	from -40°F to 208°F	
Maximun working pressure	325 bar	5,076 psi	
Burst pressure	1,300 bar	18,855 psi	
Material (inside)	Polyurethane		
Material (outer)	Polyamide PA12 + 2 metallic reinforcements	Colour	Black
Connections	Swivel coupling BSP 1/4" F		

Polyurethane hose with Polyamide exterior and a **double metallic reinforcement**.

1/4" F High security snap-on couplings. Prepared to withstand the high pressures of Airless painting.

Dimensions Ø 6 x 13.8 mm.

TECHNICAL DATA — AIRLESS PRODUCT HOSE SAFETY

Temperature range	from -40°C to 98°C	from -40°F to 208°F	
Maximun working pressure	450 bar	6,527 psi	
Burst pressure	1,800 bar	26,107 psi	
Material (inside)	Polyurethane		
Material (outer)	Polyamide PA12 + 2 metallic reinforcements	Colour	Black
Connections	Coupling BSP 1/4" F		

VERSIONS — AIRLESS PRODUCT HOSE

Description		Code
5 m. Product hose Ø 6 x 13.8 mm. with 1/4" F connection		**86463826**
10 m. Product hose Ø 6 x 13.8 mm. with 1/4" F connection		**86463827**
15 m. Product hose Ø 6 x 13.8 mm. with 1/4" F connection		**86463828**
10 m. Product hose Ø 6 x 13.8 mm. with 1/4" F connection	**SAFETY**	**86463834**

Hoses for Airless Equipment

Airless dispersions product hose

Antistatic product hose for airless high pressure electric pumps.

Polyamide hose and polyester reinforcement with polyurethane exterior.

1/4” F swivel couplings. Prepared to withstand the high pressures of Airless painting.

Dimensions Ø 6 x 12.3 mm.

REGULATIONS:
DIN EN 11 27-2, DIN 8028 - 6.3,
BGR 132 - 3.3.5,
ATEX 2014/34/EU II 2G cT5

TECHNICAL DATA — AIRLESS PRODUCT HOSE DISPERSIONS

Temperature range	from -40°C to 98°C	from -40°F to 208°F	
Maximun working pressure	250 bar	3,626 psi	
Burst pressure	1,000 bar	14,504 psi	
Material (inside)	Polyamide PA12 + Polyester reinforcements		
Material (outer)	Polyurethane	Colour	Blue
Connections	Swivel coupling BSP 1/4” F		

VERSIONS — AIRLESS PRODUCT HOSE DISPERSIONS

Description		Code
10 m. Product hose Ø 6 x 12.3 mm. with 1/4” F connection	**DISPERSIONS**	**86463802**
20 m. Product hose Ø 6 x 12.3 mm. with 1/4” F connection	**DISPERSIONS**	**86463803**

Other Hoses

Product hose for Pressure Pots

Product hose for pressure pots with waterborne products.

PVC hose with polyester reinforcement with 3/4" F connections.

Dimensions Ø 19 x 26 mm.

REGULATIONS:
ISO 1307

VERSIONS

Description	Code
5 m. Product hose (Ø 19 x 26 mm.) with connection 3/4" F-F - Waterborne products	**56414111**
10 m. Product hose (Ø 19 x 26 mm.) with connection 3/4" F-F - Waterborne products	**56414112**
15 m. Product hose (Ø 19 x 26 mm.) with connection 3/4" F-F - Waterborne products	**56414113**

TECHNICAL DATA

PRODUCT HOSE FOR PRESSURE POTS

Temperature range	from 0°C to 60°C	from 32°F to 140°F	
Maximun working pressure	15 bar	218 psi	
Burst pressure	45 bar	653 psi	
Material (inside)	PVC and polyester reinforcement		
Material (outer)	PVC and polyester reinforcement	Colour	Transparent
Connections	3/4" F		

Set of air and product hose

Aerographic air and product hoses.

VERSIONS

Description		Code
5 m. Set of air and product hose (Ø 8 mm. + 6 mm.)	**HVLP**	**86463818**
10 m. Set of air and product hose (Ø 8 mm. + 6 mm.)		**86463819**
5 m. Set of air and product hose (Ø 8 mm. + 3 mm.)	**DYES**	**86463894**
10 m. Set of air and product hose (Ø 8 mm. + 10 mm.)	**ADHESIVES**	**86463891**

Product hoses

Product hoses. Antistatic.

VERSIONS

Description	Code
6 m. Product hose (Ø 8 x 16 mm.) with connections 3/8" F	**56414116**
11 m. Product hose (Ø 8 x 16 mm.) with connections 3/8" F	**56414117**
16 m. Product hose (Ø 8 x 16 mm.) with connections 3/8" F	**56414115**

Quick couplings and connectors

Quick couplings

The new range of plugs SAGOLA presents cutting-edge design. SAGOLA offers a wide range that gives cover 100% of market requirements. Is incorporated security versions. All steel and aluminum plugs are BSP; Males (BSPT) and females (BSPP).

Plug body made of treated steel and valve made of brass. So a guaranteed life of more than 1,500,000 uses. The new range of plugs SAGOLA incorporates a handle made of composite, which gives a high resistance to both attrition and drag. Attrition resistance tested in more than 48,000 impacts and the equivalent to a crawl 12 km.

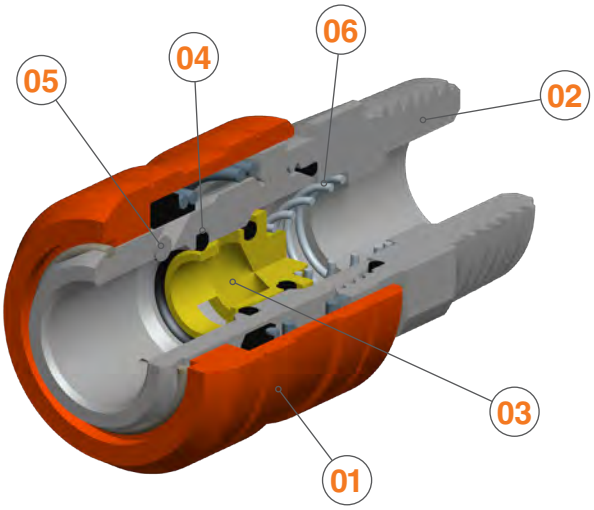

1. **SHOOTER** made of composite with a weight reduction and extraordinary durability against impact.

2. **BODY PLUG** made of steel with anticorrosive treatment.

3. **VALVES** Brass valve manufactured, specific to work at high temperatures.

4. **JOINTS** Nitrile Butadiene. Operating temperature range: -20°C +100°C.

5. **PINS** made of tempered high strength steel that guarantees the absence of attrition.

6. **SPRING** made of stainless steel.

US-Mil range — ULTRA LIGHT (45 grams)

Quick coupling
US-Mil RANGE
Flow: 68 m³/h. - 1,133 L/min.
Body and shooter made of high strength **aluminum**. Valve made of brass. Pins made of high strength steel.
Air coupling: 1/4”

Code	Version
11010531	BSPT 1/4”

Code	Version
11010431	BSPP 1/4”

Code	Version
11010629	Barb. 8 mm.

US-Mil range — STANDARD

Quick coupling
US-Mil RANGE
Flow: 68 m³/h. - 1,133 L/min.
Simple shutter plug, made of hardened **steel** with gasket made of Nitrile Butadiene. Its excellent sealing prevent dirt penetrates inside. High strength sleeve.

Code	Version
11010524	BSPT 1/4”
11010525	BSPT 3/8”
11010526	BSPT 1/2”

Code	Version
11010424	BSPP 1/4”
11010425	BSPP 3/8”
11010426	BSPP 1/2”

Code	Version
11010624	Barb. 8 mm.
11010625	Barb. 10 mm.

25 UNITS					
11010527	BSPT 1/4”	11010427	BSPP 1/4”	11010626	Barb. 8 mm.

US-Mil range — SAFETY

Quick coupling
US-Mil RANGE
Flow: 68 m³/h. - 1,133 L/min.
Plug made of hardened **steel** with gasket made of Nitrile Butadiene and double effect opening. Anti-whiplash safety plug according to ISO-4414. Two movements “push-pull” to disconnect.
High strength sleeve.

Code	Version
11010528	BSPT 1/4”
11010529	BSPT 3/8”
11010530	BSPT 1/2”

Code	Version
11010428	BSPP 1/4”
11010429	BSPP 3/8”
11010430	BSPP 1/2”

Code	Version
11010627	Barb. 8 mm.
11010628	Barb. 10 mm.

Quick couplings and connectors

Quick couplings

Euro-Profile range

STANDARD

Quick coupling
Euro Profile RANGE
Flow: 85 m³/h. - 2,000 L/min.
Simple shutter plug, made of hardened **steel** with gasket made of Nitrile Butadiene. Its excellent sealing prevent dirt penetrates inside. High strength sleeve.
Air coupling: 7.6 mm.

Code	Version
11010823	BSPT 1/4”
11010824	BSPT 3/8”
11010825	BSPT 1/2”

Code	Version
11010723	BSPP 1/4”
11010724	BSPP 3/8”
11010725	BSPP 1/2”

Code	Version
11010924	Barb. 8 mm.
11010923	Barb. 10 mm.

Euro-Profile range

SAFETY

Quick coupling
Euro Profile RANGE
Flow: 85 m³/h. - 2,000 L/min.
Plug made of hardened **steel** with gasket made of Nitrile Butadiene and double effect opening. Anti-whiplash safety plug according to ISO-4414. Two movements “push-pull” to disconnect.
High strength sleeve.
Air coupling: 7.6 mm.

Code	Version
11011323	BSPT 1/4”
11011324	BSPT 3/8”
11011325	BSPT 1/2”

Code	Version
11011423	BSPP 1/4”
11011424	BSPP 3/8”
11011425	BSPP 1/2”

Code	Version
11011523	Barb. 8 mm.
11011524	Barb. 10 mm.

Multi-Profile range

3x1 system. Compatibility: US-MIL/EUROPROFILE/ITALIAN PROFILE STANDARD

Quick coupling
Multi Profile RANGE
FLow: 85 m³/h. - 2,000 L/min.
Simple shutter plug, made of **steel** with gasket made of Nitrile Butadiene. Its excellent sealing prevent dirt penetrates inside.
Air coupling: 8 mm.

Code	Version
11010826	BSPT 1/4”
11010827	BSPT 3/8”

Code	Version
11010726	BSPP 1/4”
11010727	BSPP 3/8”

Code	Version
11010925	Barb. 8 mm.
11010926	Barb. 10 mm.

Nitto range

ASIA-PACIFIC market exclusive profile STANDARD

Quick coupling
Nitto RANGE
FLow: 85 m³/h. - 2,000 L/min.
Simple shutter plug, made of **steel** with gasket made of Nitrile Butadiene. Its excellent sealing prevent dirt penetrates inside.
Air coupling: 8 mm.

Code	Version
11011701	BSPT 1/4”
11011702	BSPT 3/8”

Code	Version
11011801	BSPP 1/4”
11011802	BSPP 3/8”

Code	Version
11011901	Barb. 8 mm.
11011902	Barb. 10 mm.

US-Mil range

Brass plug STANDARD

Quick coupling
US-Mil RANGE
Spec C-4109
Flow: 600 L/min.
Versatile. Simple blocking plug made of **brass** with Buna N gasket. Its excellent sealing avoids the penetration of impurities to the inside. Fully compatible with earlier lines of SAGOLA plugs.

Code	Version
11010520	BSPT 1/4”
11010521	BSPT 3/8”
11010522	BSPT 1/2”

Code	Version
11010420	BSPP 1/4”
11010421	BSPP 3/8”
11010422	BSPP 1/2”

Code	Version
11010621	Barb. 8 mm.
11010622	Barb. 10 mm.

25 UNITS							
	11010523	BSPT 1/4”	11010423	BSPP 1/4”	11010623	Barb. 8 mm.

Quick couplings and connectors

Quick connectors

The size 2 plug is the most commonly used push plug in paint and body shops, and also in industry for the connection of all kinds of pneumatic tools. Silicone free. All springs, valves and pins made of stainless steel. All SAGOLA connectors are manufactured in high carbon steel making them extremely strong and stress resistant.

US-Mil range

Connector without balocker. Made of steel.

Quick connector
US-Mil RANGE
Spec C-4109 (2 units)
Air coupling: 5,5 mm.
Fully compatible with earlier lines of SAGOLA plugs. Made of high-carbon **steel**. Anti-corrosive nickel etched finish. Connector without blocker.

Code	Version
11020420	BSPT 1/4”
11020421	BSPT 3/8”
11020422	BSPT 1/2”

Code	Version
11020520	BSPP 1/4”
11020521	BSPP 3/8”
11020522	BSPP 1/2”

Code	Version
11020621	Barb. 8 mm.
11020622	Barb. 10 mm.

50 UNITS

11020423	BSPT 1/4”	
11020524	BSPP 1/4”	
11020623	Barb. 8 mm.	

US-Mil range

Orientable connector.

Orientable Quick connector
US-Mil RANGE (2 units)
Air coupling: 5,5 mm.
Exclusive rotating dial system, for greater freedom of movement. Made of high-carbon **steel**. Anti-corrosive nickel etched finish. Connector without blocker.

Code	Version
11020523	BSPP 1/4”

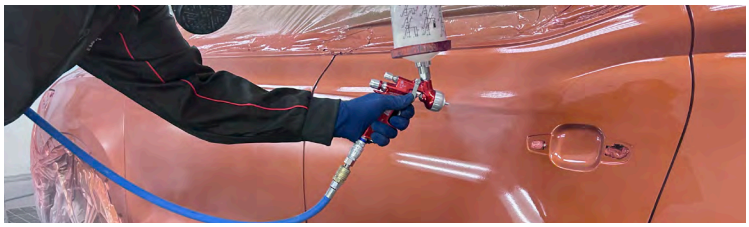

Code
70000011

Plugs display box

Sagola plugs and connectors range sampler.

Euro-Profile range

Maximum performance and durability in high production workshops

Quick connector
Euro-Perofile RANGE (2 units)
High flow. Air coupling: 7-8 mm.
Made of high-carbon **steel**. Anti-corrosion blue galvanized finish.
Connector without blocker.

Code	Version
11020710	BSPT 1/4”
11020721	BSPT 3/8”
11020722	BSPT 1/2”

Code	Version
11020810	BSPP 1/4”
11020821	BSPP 3/8”
11020822	BSPP 1/2”

Code	Version
11020921	Barb. 8 mm.
11020922	Barb. 10 mm.

Nitto range

ASIA-PACIFIC market exclusive profile

Quick connector
Nitto RANGE (2 units)
High flow. Air coupling: 7-8 mm.
Made of high-carbon **steel**. Anti-corrosion treatment. Connector without blocker.

Code	Version
11021001	BSPT 1/4”
11021002	BSPT 3/8”

Code	Version
11021101	BSPP 1/4”
11021102	BSPP 3/8”

Code	Version
11021201	Barb. 8 mm.
11021202	Barb. 10 mm.

Quick couplings and connectors

Connection coupling

High flow. Made of brass with anti-corrosive treatment. (2 units)

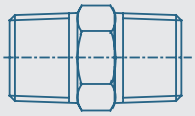

Code	Version
11000101	BSPT 1/4” M-M
11000102	BSPT 1/2” M-M
11000103	BSPT 3/8” M-M

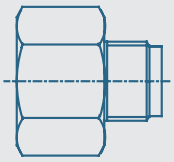

Code	Version
11000104	BSPT 1/2” M - 3/8” M
11000105	BSPT 3/8” M - 1/4” M
11000112	BSPT 1/2” M - 3/8” F
11000113	BSPT 1/2” M - 1/4” F

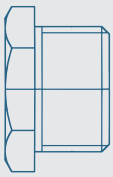

Code	Version
11000106	BSPP 1/2” H - 3/8” M
11000107	BSPP 3/8” H - 1/4” M
11000108	BSPP 3/8” M - 1/4” F

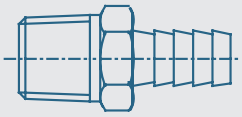

Code	Version
11000109	BSPT 1/2” M - Barb. 8 mm.
11000110	BSPT 3/8” M - Barb. 8 mm.
1100011	BSPT 1/4” M - Barb. 8 mm.

How to connect and disconnect the plug?

Standard plug connect and disconnect

1. Press until coupled

2. Pull the body as the arrow indicates

3. Disconnect the plug

Safety plug connect and disconnect

1. Move plug and tool as indicated by arrows

2. Push the plug

3. Pull the plug

4. Disconnect the plug

ATENCIÓN
WARNING

07

General applications spray guns

Pneumatic tool of essential use in the body shop. Complete and high-quality service.

In this section we offer cord sealant guns, anti-gravel guns for underbody, blow guns and pressure check gun.

3900 Plus sealant guns

3900 Plus M6

3900 Plus M4

3900 Plus

3900 Plus sealant guns

The SAGOLA 3900 Plus pneumatic sealers are a compact, efficient and light solution for everyday needs in any workshop. These pneumatic guns are very useful when it comes to structure assembling, repairs and windshield set-ups, amongst others.

There are two versions: the 3900 Plus for sealants in cartridges and the 3900 Plus M4/6 for sealants in sausages. Both versions include a trigger with discharge valve, which guarantees a great precision and control.

The metallic internal parts assure a long working life. Besides, those parts do not require any manipulation neither any maintenance.

Its body is made of high resistance aluminum. The front part on the 3900 Plus is made of non-deformable plastic.

Very strong product capable to work for long working hours.

TECHNICAL DATA

Sagola 3900 PLUS

	3900 Plus		3900 Plus M4		3900 Plus M6	
Length	250 mm.	9.84”	250 mm.	9.84”	320 mm.	12.60”
Weight	650 g.	1.43 lbs	780 g.	1.72 lbs	965 g.	2.13 lbs
Air inlet connection	BSP 1/4” M		BSP 1/4” M		BSP 1/4” M	
Standard supply type	Cartridge		Sausages		Sausages	
Capacity	300 ml.	10.14 oz fl	300/400 ml.	10.1/13.5 oz fl	300/400/600 ml.	10.1/13.5/ 20.29 oz fl
Working pressure	4 - 6 bar	58 - 87 psi	4 - 6 bar	58 - 87 psi	4 - 6 bar	58 - 87 psi
Maximum air inlet pressure	10 bar	145 psi	10 bar	145 psi	10 bar	145 psi
Material on the front	Plastic		Anodized aluminum		Anodized aluminum	
Discharge valve	OK		OK		OK	

3900 Plus sealant guns

Sealant Gun main parts

01 AIR VALVE

02 AIR INLET

03 TRIGGER

04 ALUMINIUM BODY

05 ALUMINUM FRONT

06 PLASTIC FRONT

07 PISTON

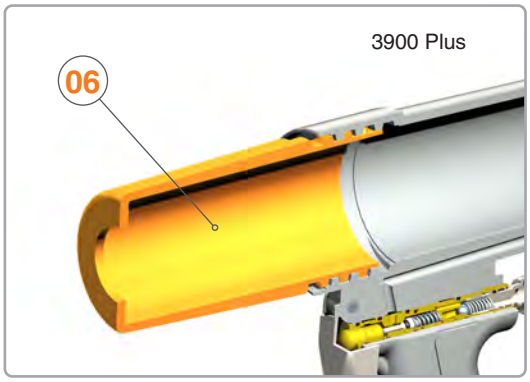

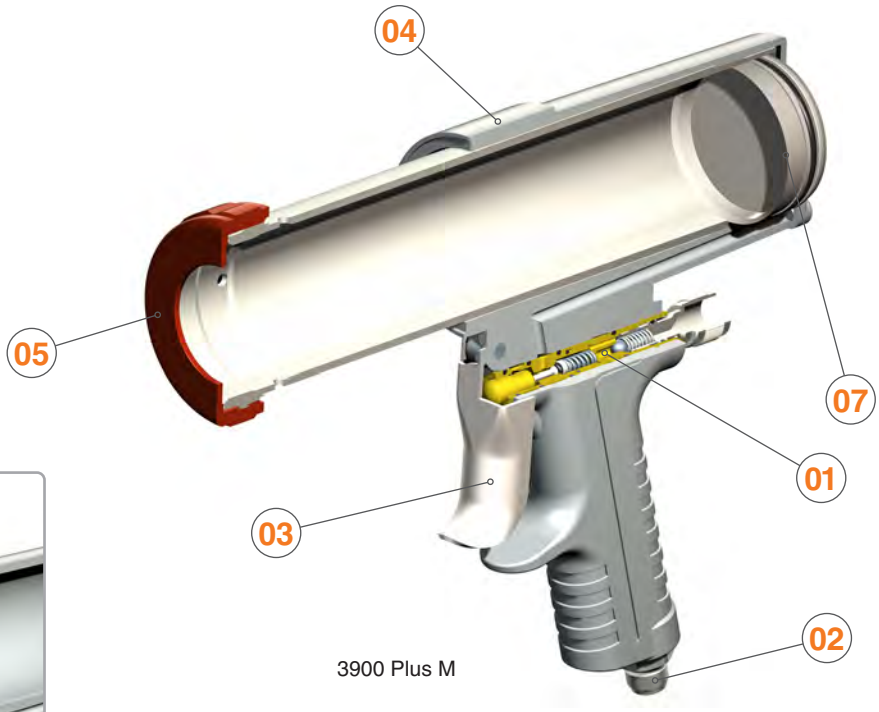

VERSIONS

Description	Code
3900 Plus sealant gun	10330201
3900 Plus M4 sealant gun	10330401
3900 Plus M6 sealant gun	10330402

Preparation of the cartridge or sausage

Cartridge praparation 3900 Plus

1. Cut the end of the cartridge and cap

2. Attach the cap to the cartridge

3. Remove the front cover and insert the cartridge

4. Close the deposit with the front cover

Sausage praparation 3900 Plus M

1. Cut off the end of the sausage

2. Remove the front cover of the deposit

3. Insert the cap

4. Place the sausage inside the deposit

5. Close the deposit with the front cover

518 Pro anti-gravel gun

518 Pro anti-gravel gun

Professional pressurized pneumatic gun for antigravel cartridges and underbody protection.

Total regulation on product flow and quality of atomization and spray size. Air inflow regulator.

Operating pressure. The cartridge container is made in anodized aluminum. It is light and sturdy. Needle regulator to control precisely the texturing. Very accurate depressurizing valve. It is easy to handle even with gloves.

Special air cap for cavity wax, that includes two types of dispensers. (OPTIONAL). Stainless steel silencer.

The 518 Pro works with low pressure and offers the maximum regulation options and productivity.

TECHNICAL DATA

		Sagola 518 PRO
Dimensions	22.8 x 10 x 36.5 cm.	9 x 4 x 14.4”
Weight (empty)	1.38 Kilograms	3.02 lbs
Air consumption	160 L/min. (at 3.5 bar)	5.65 cfm (at 50.7 psi)
Working pressure	2 - 4 bar	29 - 58 psi
Maximum air inlet pressure	10 bar	145 psi
Connections	BSP 1/4” M	

VERSIONS / ACCESSORIES

Description	Code
518 PRO anti-gravel gun	**10330301**
Nozzles Kit + Gun adapter (Optional)	**56418705**
• Rosette nozzle 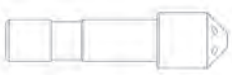	
• 360° nozzle	

Optional special nozzle for small cavities

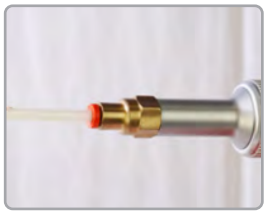

Gun adapter

416 anti-gravel gun

416 anti-gravel gun

Pneumatic gun for antigravel cartridges and underbody protection. Operation by suction.

Gun for the application of standardized acoustic insulation 1 L. cartridges. To be screwed directly to the cartridge.

Adjustable metallic aircap to control the quantity and texture of the product.

TECHNICAL DATA

		Sagola 416
Dimensions	18.7 x 4.5 x 31.1 cm.	7.4 x 1.8 x 12.2”
Weight (empty)	0.52 Kilograms	1.15 lbs
Air consumption	160 L/min. (at 3.5 bar)	5.65 cfm (at 50.7 psi)
Working pressure	3 - 10 bar	43.5 - 145 psi
Maximum air inlet pressure	10 bar	145 psi
Connections	BSP 1/4” M	

Description	Code
416 anti-gravel gun	**20330401**

Screwed directly to the cartridge

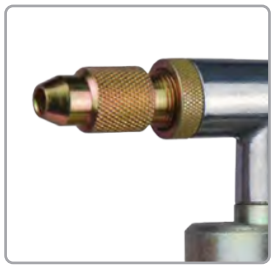

Adjustable metallic aircap

1/4” air inlet

Classic S1 blowguns

Classic S1 blowguns

Blowgun with body built in aluminum. Light but robust. Air inlet 1/4” male.

Three versions of the blow gun Classic S1:

- Classic S1 with metallic aircap.
- Classic S1 with extension aircap.
- Classic S1 with plastic aircap.

Classic S1 Metallic

Code
20340601

Classic S1 Plastic

Code
20340603

Classic S1 Extension

Code
20340604

Classic S1 Venturi blowguns

Multiply the air flow X4 with the help of the Venturi system offered by this version of the Classic S1. Blowgun with body built in aluminum. Light but robust. Air inlet 1/4” male.

Classic S1 Venturi

Code
20340605

Pocket blower

Small size blower. Pen-type clip. Adjustable flow. Quick disconnect connector.

Pocket blower

Code
40000336

TECHNICAL DATA

Classic S1/Venturi/Blower

		Classic S1		Classic S1 Venturi		Pocket blower	
Dimensions	Metallic	11.7 x 2.5 x 15.3 cm.	4.6 x 1 x 6”	15.8 x 2.7 x 15.3 cm.	6.2 x 1.06 x 6”	113 mm. (close) 116 mm. (open)	4.45” (close) 4.57” (open)
	Plastic	11.7 x 2.5 x 15.3 cm.	4.6 x 1 x 6”				
	Extension	20.6 x 2.5 x 15.3 cm.	8.1 x 1 x 6”				
Weight		190 g. / 187 g. / 198 g. 0.418 lbs / 0.413 lbs / 0.436 lbs		225 g.	0.5 lbs	23 g.	0.05 lbs
Air inlet connection		Racor 1/4” M		Racor 1/4” M		1/4” M US-Mil	
Air consumption (at 6 bar)		240 L/min.	8.5 cfm	240 L/min.	8.5 cfm	450 L/min.	15.9 cfm
Air flow ratio (air outlet)		1:1		4:1 (925 L/min. - 33 cfm)		1:1	
Working pressure		3 - 6 bar	43.5 - 87 psi	3 - 6 bar	43.5 - 87 psi	3 - 6 bar	43.5 - 87 psi
Maximum air inlet pressure		10 bar	145 psi	10 bar	145 psi	10 bar	145 psi

Classic P1 Oil Gun / Adhesives gun

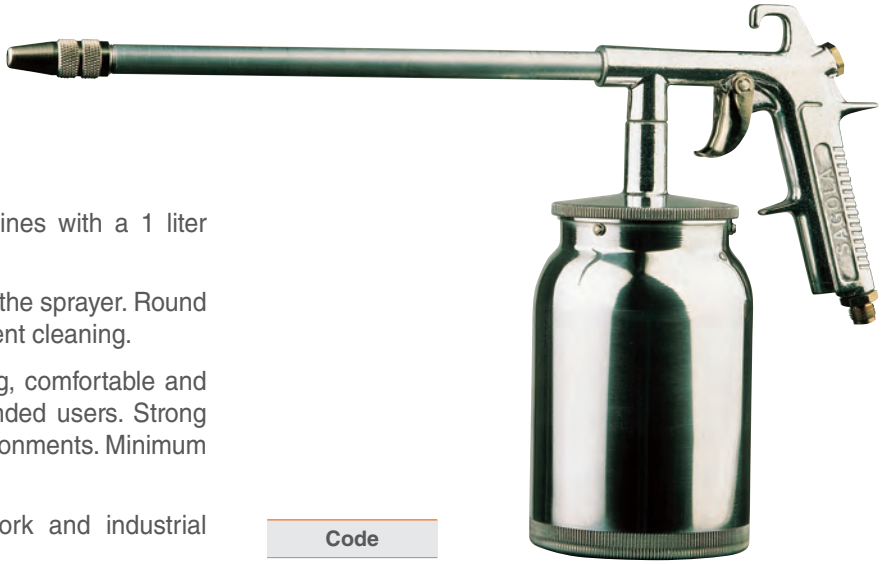

Classic P1 Oil Gun

Oil gun for cleaning machinery and engines with a 1 liter capacity tank.

Product flow easily regulated by means of the sprayer. Round projection of the product to achieve excellent cleaning.

Ergonomic gun design. Easy to use, hang, comfortable and perfect for both left-handed and right-handed users. Strong aluminum body suitable for industrial environments. Minimum maintenance.

For application sectors such as bodywork and industrial machinery.

Code
20340701

TECHNICAL DATA

		CLASSIC P1
Dimensions	40.2 x 10.2 x 25.5 cm.	15.8 x 4 x 10”
Weight (empty)	734 g.	1.62 lbs
Deposit capacity	1 liter	0.22 Galon US
Air consumption at 6 bar (87 psi)	146 L/min.	5.16 cfm
Work pressure	3 - 10 bar	43.5 - 145 psi
Maximum air inlet pressure	10 bar	145 psi
Connections	BSP 1/4” M	

Sagola Adhesives gun

Especially for bead applications of glues and adhesives. White glue application for the wood industry.

Teflon-coated body makes cleaning easy.

Incorporates a series of 1 and 2 mm. caps and product flow regulator.

The 3 mm. aircap, scoring aircap (to mark lines) and 4-aperture aircap (to apply glue to cavities) can be acquired as options.

VERSIONS / ACCESSORIES

Description		Code
Sagola Adhesives gun		**10151401**
Nozzle for glues Ø 1 mm.	**Included**	**56418030**
Nozzle for glues Ø 2 mm.	**Included**	**56418026**
Nozzle for glues Ø 3 mm.	**Accessory**	**56418027**
Nozzle for glues (slotted)	**Accessory**	**56418029**
Nozzle for glues (4 holes)	**Accessory**	**56418028**

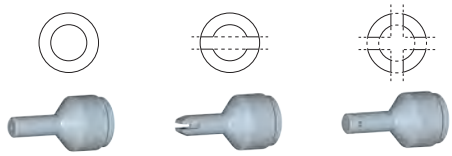

Nozzle Ø 1.2 & 3 mm. *Slotted nozzle* *Nozzle 4 holes*

L range pneumatic sanders

REGULATIONS:
2006/42/EC
ISO 12100:2010
ISO 11148-8:2011

L range pneumatic sanders

L range sanders have been designed for workshops where high performance and top quality finishes are demanded.

High performance Orbital pneumatic sanders. Light, compact and powerful. Profiled composite casing, comfortable and long-lasting.

With 360° rotatable rear air outlet, directing the air away from the operator. It is easily connected to central or portable extraction systems.

The L505 sander has been designed for quick grinding down, with a good quality surface finish.

The L252 is a sander which ensures high quality finishes without leaving any kind of marks on the surface.

And the L252R sander which ensures precision sanding and top quality finishing. It is ergonomic and light, perfect for those small retouches.

If you are looking for scratch-free quality, you can trust the L range. Due to the lubricant-free design, there is no concern about substrate contamination.

TECHNICAL DATA

	L252		L505		L252R	
Motor power	2 C.V.		2 C.V.		2 C.V.	
Free speed	12,000 r.p.m.		12,000 r.p.m.		12,000 r.p.m.	
Air consumption (4.5 bar - 65 psi)	280 L/min.	9.9 cfm	280 L/min.	9.9 cfm	280 L/min.	9.9 cfm
Maximum air consumption (6 bar - 87 psi)	380 L/min.	13.42 cfm	380 L/min.	13.42 cfm	380 L/min.	13.42 cfm
Air inlet	BSP 1/4" F		BSP 1/4" F		BSP 1/4" F	
Recommended minimum hose Ø	Ø 8 mm. (0.31")		Ø 8 mm. (0.31")		Ø 8 mm. (0.31")	
Net weight	0,87 Kg.	1.92 lbs	0.87 Kg.	1,92 lbs	0.84 Kg.	1.85 lbs
Total length	118 mm.	4.65"	118 mm.	4.65"	110 mm.	4.33"
Oscilation	2.5 mm.	0.1"	5 mm.	0.2"	2.5 mm.	0.1"

VERSIONS / ACCESSORIES

Description		Code
L252 sander		40000231
L505 sander		40000232
L252 R sander		40000230
Sand Disck Ø 75 mm. (2.95") (Velcro)	Spare part	49000220
Sand Disck Ø 152 mm. (6") (Multiholes, Velcro)	Spare part	49000501

Sand Disck

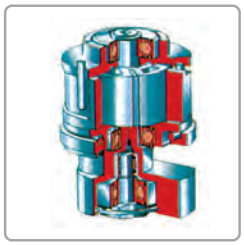

Composite impellers and rotor Lubrication-free, works without oil. Counterweight system to guarantee smooth operation.

Sagola 1200X Polisher

REGULATIONS:
2006/42/EC
2004 /108/EC
EN 60745-1:2009 + A11:2010
EN 60745-2-3:2011 + A2:2013 + A11:2014 + A12:2014

Sagola 1200X polisher

Electronic angular electric polisher. Multipurpose polisher with smooth start and constant speed control.

It has reversible auxiliary handle, upper handle (type G), On/Off switch. M14 universal anchor.

Recommended for bodyshop polishing, furniture, paints and varnishes.

Supplied in a practical carrying case.

Transport case

TECHNICAL DATA

	1200X POLISHER	
Power	1,200 w	
Voltage	240 V / 50 Hz	
Adjustable speed	600 - 3,000 r.p.m.	
Disck dimensions	Ø 180 mm.	Ø 7”
Weight	3.2 Kg.	7.05 lbs

VERSIONS / ACCESSORIES

Description		Code
Sagola 1200X Polisher		40000507
Polishing beret	Spare part	49000109
Polishing plate	Spare part	49000110

Polishing beret

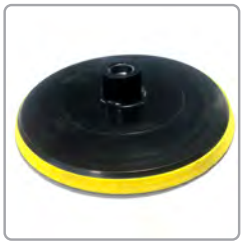

Polishing plate

SAGO

08

Accessories and Consumables

Protective masks for sanding and painting processes, antistatic painter's overalls...

Ensuring optimal and safe working conditions is one of SAGOLA's current priorities.

Why increase waste management costs for paint containers, paper, and cardboard simply because you can't reduce their volume? For this reason, Sagola presents its Cardboard and Can Compactors.

The daily routine in the workshop—sanding, paint preparation, masking, booth maintenance—are everyday tasks in bodywork, but crucial for achieving excellent results. At SAGOLA, we want to contribute our experience and service to help you achieve this.

Anti-static coverall

Sagola anti-static coverall

Antistatic coveralls of high comfort. Breathable.

Ventilation systems with slots in the back and in the armpits.

Adjustable hood with elastic band and velcro. Press-buttons neck closure. Adjustable feet closure. Large comfortable elastic wrist closures.

2-way zip and flap fitted. Includes 2 chest pockets, 2 side pockets, 1 hip pocket and 1 inside pocket.

Original Dupont Teflon coating (water repellent and dirt-resistant).

Silicone and lint free.

Teflon non-stick coating

Antistatic coverall

TECHNICAL DATA

Composition	98% polyester, 2% carbon
Washing temperature	30°C (86°F) or chemical cleaning
Protection	PPE CAT.I
Antistatic fabric	EN 1149-5:2018
Serigraphy	Black Sagola logo (On the back and pocket of the chest)

Black Sagola anti-static coverall

Antistatic coverall that protects from general dirt that occurs when spraying paints. Prevents contamination of the painted surface by dust and fluff.

Black in color with red decorative stripes. High-quality zipper with rubber puller. Hood with elastic band.

Breathable fabric on the back. Breathable mesh inserts under the arms and in the crotch.

Chest pocket with protective flap and Velcro closure. 2 side pocket for hands with protective strip and velcro closure. Back pocket. Comfortable nylon wristbands and elasticated ankle waistband.

Antistatic coverall

TECHNICAL DATA

Composition	100% polyester
Washing temperature	40°C (104°F) or chemical cleaning
Protection	PPE CAT.I
Antistatic fabric	EN 1149-1:2006
Serigraphy	White Sagola logo (On the back, chest pocket and leg)

VERSIONS

Description	Size	UE size	Code	Code
XS Sagola anti-static coverall	XS	38/40	**40000523**	-
S Sagola anti-static coverall	S	42/44	**40000524**	-
M Sagola anti-static coverall	M	46/48	**40000525**	**40000536**
L Sagola anti-static coverall	L	50/52	**40000526**	**40000537**
XL Sagola anti-static coverall	XL	54/56	**40000527**	**40000538**
XXL Sagola anti-static coverall	XXL	58/60	**40000528**	-
XXXL Sagola anti-static coverall	XXXL	62/64	**40000529**	-

4240 breathing equipment

REGULATIONS:
BS EN 1835
Protection: 40 factor
EC Certificate No. 58459
BSi Product Certificate

Complet breathing equipment

Complete maximum protection breathing equipment that includes: Belt, preset regulator incorporating warning gauge with high efficiency coalescing filter and activated carbon filter to remove low levels of moisture and oil, which absorbs vapor and odour. 10 meters of hose and safety plugs, 1.5 meter of hose spray gun outlet.

High quality breathing equipment that meets BS EN 1835 standards, with a protection factor of 40. EC Certificate nº 58459, issued by BSi Product Certificate.

Regulation: 89/686/CEE (EPI)

Hose kit: 10 m. de ose with safety plug, 1.5 m. of hose spray gun outlet.

TECHNICAL DATA

	4240 BREATHING EQUIPMENT	
Air pressure	4 - 10 bar	58 - 145 psi
Mask air flow	160 - 232 L/min.	5.65 - 8.19 cfm
Hose length	10 m. (supply to regulator)	39.4”
Working temperature range	1.5°C - 50°C	34.7°F - 122°F
Filter	0.01 µm	
Filter life	400 hours	

VERSIONS / ACCESSORIES

Description	Connection	Code
4240 Mask + Hose Kit	US-Mil	**15830101**
4240 Mask + Hose Kit	Nitto	**15830102**
4240 Mask	US-Mil	**15830103**
4240 Mask	Nitto	**15830104**
Visor 10 units	**Spare part**	**15880013**
Charcoal filter	**Spare part**	**15880015**
Acetate screen kit	**Spare part**	**15880011**

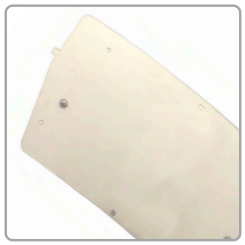

Acetate screen

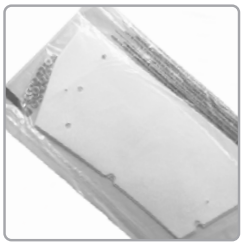

Visor

When used with spraygun, 620 L/min at 6 bar will be required

MP300 breathing mask

MP300 breathing mask

The MP300 mask and A1 filter set has been designed to provide maximum protection against inhalation of organic products with a boiling point over 65°C, without inconveniencing users in any way, enabling them to carry out their work in complete comfort.

The set adapts perfectly to all kinds of expressions and movements, always providing the highest possible level of protection.

The set is made up of a mask and two filters and covers the user's nose, mouth and chin. It is manufactured using light, highly resistant materials that do not have any harmful effects on users' health and hygiene.

The main body of the mask is made from soft natural rubber.

The mask is fitted with an exhaling valve made up of a valve-holder and a membrane, which makes it easier for exhaled air to escape.

It has a comfortable neck strap and head strap that can be easily adjusted to the right length.

REGULATIONS:
EN 140: 1998, EN 143:2000/A1:2006,
EN 14387:2004/A1:2008
Control agency No. 0082

TECHNICAL DATA

		MP300 BREATHING MASK
Breathing resistance Flujo sinusoidal 25 x 2 L/min:	Inhalation:	2.00 mbar
	Exhalation:	3.00 mbar
Breathing resistance Continuous flow inhalation	At 30 L/min. (1.06 cfm):	0.50 mbar (0.007 psi)
	At 95 L/min. (3.35 cfm):	1.30 mbar (0.019 psi)
CO_2 Content (dead space)	1.00 %	
Leaks to inside (tightness)	< 5.00 %	

VERSIONS / ACCESSORIES

Description		Code
MP300 Mask		**14810301**
Filter 10 units	**Spare part**	**56418052**

Filter spare parts

Classic MP2 breathing mask

Classic MP2 breathing mask

The Classic MP2 mask and A1 filter set has been designed to provide maximum protection against inhalation of organic products with a boiling point over 65°C, without inconveniencing users in any way, enabling them to carry out their work in complete comfort.

The set adapts perfectly to all kinds of expressions and movements, always providing the highest possible level of protection.

The double air inlet through the two filters allows inhalations of a higher air flow, making breathing easier.

Composed of a mask and two filters, it covers the user's nose, mouth and chin. Manufactured with lightweight and highly resistant materials.

Equipped with an exhalation valve that allows easy expulsion of air when breathing.

Elastic strap for a firm and comfortable fit.

REGULATIONS:
EN 140: 1998, EN 143:2000/A1:2006,
EN 14387:2004/A1:2008
Control agency No. 0082

TECHNICAL DATA

Classic MP2 BREATHING MASK

Breathing resistance Flujo sinusoidal 25 x 2 L/min:	Inhalation:	0.52 mbar
	Exhalation:	1.64 mbar
Breathing resistance Continuous flow inhalation	At 30 L/min. (1,06 cfm):	0.11 mbar
	At 95 L/min. (3,35 cfm):	0.33 mbar
CO_2 Content (dead space)	0,60 %	
Leaks to inside (tightness)	< 2,00 %	

VERSIONS / ACCESSORIES

Description		Code
Classic MP2 Mask		**14810201**
Filter 10 units	**Spare part**	**56418052**

Filter spare parts

Mascarillas FFP2

REGULATIONS:
UNE-EN 149:2001 + A1:2009 (FFP2)
Directive EPI UE 2016/425

M200/M210 mask
FFP2 Protection

M200 and M210 self-filtering paper masks with FFP2 level protection. These masks are designed for protection against solid and liquid particles of low and medium toxicity.

Suitable for use against non-ferrous metal dust, metal welding fumes, gases and mists of different materials such as lead, aluminum and manganese.

The mask body contains a flexible metal bar for a perfect fit in the nose area.

Adjustment to the head by double elastic band.

The M210 mask incorporates an exhalation valve to make breathing easier.

VERSIONS

Description	Units/Box	Code
M200 Mask	20	**40000263**
M210 Mask (with valve)	10	**40000264**

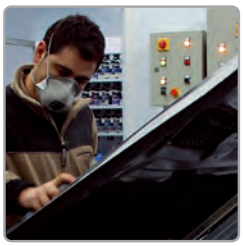
Sanding

Painting

The mask can be used in pollution concentrations up to 10 times the Occupational Exposure Limit (OEL).

Crushers

Can Crusher

Significant space saving and cost reduction in waste management.

Designed to solve residue storage and disposal problems in places like bodyshops, industrial workshops, garages, etc...

Top load. Greater working comfort.

Valid for cylindrical recipients up to 25L. (maximum height 45 cm. and 31 cm. diameter).

Code
40000314

Can and carton crusher

Two accesses:

> Upper: loads cardboard and paper.

> Lower: unloads cardboard, loads cans.

Reel of string at rear to tie the crushed bundles of paper and cardboard.

Code
40000315

TECHNICAL DATA	Can Crusher		Can and carton crusher	
Dimensions	54 x 51 x 146 cm.	21.3 x 20.1 x 49.6”	60 x 75 x 175 mm.	23.6 x 29.5 x 68.9”
Weight	185 Kg.	408 lbs	225 Kg.	496 lbs
Cylinder (Stroke)	500 mm.	19.7”	600 mm.	23.6”
Ø Cylinder	160 mm.	6.3”	160 mm.	6.3”
Pressing power	> 1,600 Kg.	> 3,527 lbs	> 1,600 Kg.	> 3,527 lbs
Internal volume	-	-	approx. 210,000 c.c.	approx. 55.47 gal
Working pressure	8 bar	116 psi	8 bar	116 psi
Control / Safety system	Pneumatic		Pneumatic	

Consumables

Paper paint-strainers

Paper paint-strainers for fast and perfect filtering of the paint.

Paper paint-strainers with 125 or 190 microns Nylon mesh.

To obtain a quick filtering and a surface without speckles.

Supplied in plastic bag to keep them always clean.

VERSIONS

Description	Application	Code
190 µm p. p. strainers	Clearcoats / single stage	**40000253**
125 µm p. p. strainers	Waterborne paints	**40000254**

Mixing cups and lids

Cups with legs to prevent spillage. Reinforced top edge. Made of polypropylene. High resistance.

VERSIONS

Description	Units/Box	Code
400 ml. mixing cup	200	**40000508**
650 ml. mixing cup	200	**40000509**
1,300 ml. mixing cup	200	**40000510**
2,300 ml. mixing cup	175	**40000511**

VERSIONS

Description	Units/Box	Code
400 ml. cup lid	100	**40000512**
650 ml. cup lid	100	**40000513**
1,300 ml. cup lid	100	**40000514**
2,300 ml. cup lid	100	**40000515**

Mixing cup dispenser

VERSIONS

Description	Code
400 ml. mixing cup	**40000517**
650 ml. mixing cup	**40000518**
1,300 ml. mixing cup	**40000519**
2,300 ml. mixing cup	**40000520**

Product mixers

Product mixers of 20 and 30 cm. of length.

VERSIONS

Description	Units/Box	Code
20 x 2 cm. product mixer	500	**40000499**
30 x 2 cm. product mixer	200	**40000320**

Particle removal kit

It is used to remove any particles of dust or dirt that may fall on the fresh paint .

Code
40000249

Booth anti-dust. 10 liters

Product for protecting the walls, screens and glass of a spray booth.

- Protects from spray and dust.
- Application with spray gun, roller or brush.
- Transparent and self adhesive layer.
- Clean product.
- Easily removable with water.

Code
40000023

Sagola DPC

SAGOLA DPC™

DISPOSABLE PAINT CUP SYSTEM

The Sagola DPC™ Disposable Paint Cup System by Sagola offers a cost effective, time saving, quick colour change solution for today's busy spray shop professionals.

Tough Plastic ABS Cup
with integrated measuring guides. Available in a range of volumes from 100ml - 800ml (3.38 - 27 fl oz).

Disposable Liner
recyclable and designed to collapse evenly.

Domed Lid & Filter
integrated, full diameter filter for consistent paint flow.

Screw Collar
with integrated cup seal.

Adaptor
with enhanced twist lock connector. Compatible with all Sagola spray guns.

Cup Seal Plug
for storing paint whilst not in use.

Sagola DPC

Easy to Clean

Compared to traditional gravity cups the Sagola DPC™ System significantly reduces cleaning time and solvent use.

Easy to Use

On cup ratios and fill markings reduce the reliance on traditional mixing cups, just fill, mix and spray!

Easy to Store

To store unused paint between coats simply fit the Cup Seal Plug and store upside down to keep the filter wet.

Easy to Change

With a range of adaptors to fit Sagola Gravity Spray Guns as well as other manufacturers' guns, starting to use Sagola DPC™ System couldn't be easier.

DPC™ Technical Data/ Versions

CUP	LID	LINER	COLLAR	PLUG	Code DPC™
100 ml.	125 µm	100 ml.			52850101
	190 µm	100 ml.			52850102
200 ml.	125 µm	200 ml.			52850103
	190 µm	200 ml.			52850104
400 ml.	125 µm	400 ml.			52850105
	190 µm	400 ml.			52850106
600 ml.	125 µm	600 ml.			52850107
	190 µm	600 ml.			52850108
800 ml.	125 µm	800 ml.			52850109
	190 µm	800 ml.			52850110
1 Pc.	50 Pcs.	50 Pcs.	1 Pc.	20 Pcs.	<< UNITS

ADAPTERS

for Sagola spray guns and other guns on the market.

4600 DFT / HEX	3300 / 4100 3400 / Mini Pro XD	Classic Lux	IWATA			SATA	DEVILBISS			

Check with the gun manufacturer for the thread type for different models.

SagolaSPRAY™

Accelerate and improve your spray gun training skills virtually, whether in the classroom, at work, or at home, using SagolaSPRAY™. Elcometer's VR technology is designed to teach and practice the four basic aspects of spray gun control—distance, angle, consistent speed, and spray overlap—without wasting valuable paint booth time and with minimal hardware.

Learn

SagolaSPRAY™ teaches painting techniques that can be practiced as many times as needed.

Save

Learning in a VR environment is environmentally friendly, saving paint, materials, and time.

Improve

Get instant feedback and learn from your mistakes; simply complete the activity and repeat it!

DISTANCE

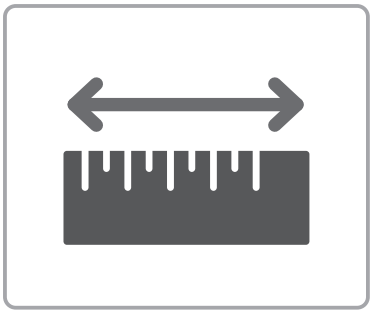

Learn how to hold the gun at the correct distance to ensure a perfect finish.

FAN PATTERN

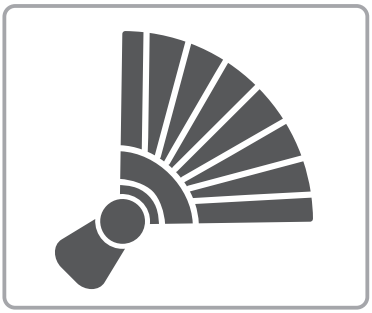

Learn how to adjust your hand position to achieve the correct spray angle.

SPEED

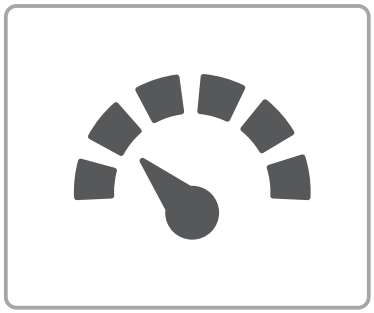

Learn about the speed of the airbrush gun and how to move around with it.

SagolaSPRAY™

SagolaSPRAY™ is a virtual reality spray painting training program. It has been developed by professionals to give the painters of the future a hands-on painting experience without getting their hands dirty.

Who is SagolaSPRAY™ for?

Students, apprentices, teachers, schools, training centers, and automotive and industrial painting professionals can all benefit.

What does SagolaSPRAY™ do?

It facilitates the correct application of painting techniques in aspects such as distance, speed, and angle of application.

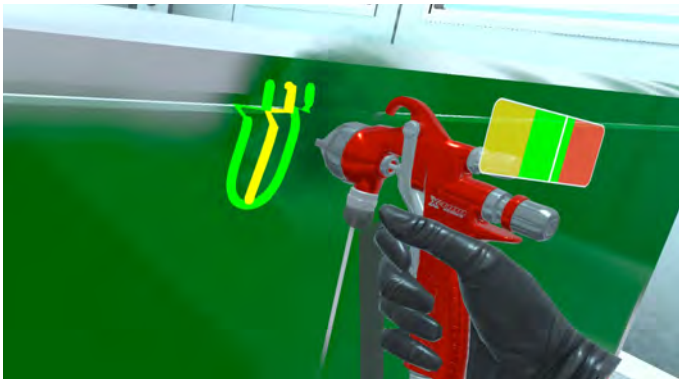

How does SagolaSPRAY™ work?

Both the booth environment and objects are displayed at real size, meaning the user will perform the same movements both inside and outside the virtual reality. This will help them create a routine of movements that will be applied in the real world.

Why choose SagolaSPRAY™?

Practicing in virtual reality environments offers sustainable learning due to savings in paint, materials, and time; as well as an opportunity to immediately correct mistakes.

09

Application Guides

Complete information on our products through application guides to help in their use.

Easy and quick search guides.

Industrial sprayguns

APPLICATION GUIDE
GRAVITY SPRAYGUNS
INDUSTRY

		MODELS	X 4100 SERIES		
		AIRCAPS System	X96 64/62S Medium Pressure	XT01 EPA	XT03 3030 HVLP
GRAVITY SPRAY GUNS	INDUSTRIAL BODYSHOP	Fillers	1.6 - 1.8 [96]	1.6 - 1.8 [XT01]	1.6 - 1.8 [XT03]
		Basecoats		1.3 - 1.4 [XT01]	1.4 [XT03]
		Clearcoats	1.4 - 1.6 [96]	1.4 [XT01]	
		Single stage paints	1.6 [96]	1.4 - 1.6 [XT01]	
	METAL INDUSTRY	Primers	1.6 - 1.8 [96]		1.8 [XT03]
		Enamels and clears	1.4 - 1.6 [96]	1.4 - 1.6 [XT01]	
		Thick coats	2.2 - 2.8 [64/62S]		
		Silicates and abrasives	2.2 CT - 2.8 CT [64/62S]		1.8 CT - 2.5 CT [3030]
	WOOD INDUSTRY	Dyes	1.2 - 1.3 [96]	1.2 - 1.3 [XT01]	1.3 [XT03]
		Basecoats and sealants	1.6 - 1.8 [96]	1.6 [XT01]	1.8 [XT03]
		Clearcoats	1.4 - 1.6 [96]	1.4 - 1.6 [XT01]	
		Pigmented lacquers	1.4 [96]	1.4 [XT01]	
	GENERAL INDUSTRY	Adhesives			
		Ceramic and vitro-ceramic	1.8 CT - 2.8 CT [64/62S]		1.6 CT - 2.2 CT [3030]
		Paint for plastic and Soft	1.4 - 1.8 [96]	1.4 - 1.6 [XT01]	1.4 - 1.6 [XT03]
		Calorific	1.4 - 1.6 [96]	1.4 - 1.6 [XT01]	1.4 [XT03]

APPLICATION GUIDE
PRESSURE/SUCTION GUNS
INDUSTRY

		MODELS	X 4100 SERIES		
		AIRCAPS System	765/777/64/62/67/20A Medium Pressure	XT01 B EPA	XT03 3030 HVLP
PRESSURE/SUCTION SPRAYGUNS	INDUSTRIAL BODYSHOP	Fillers	1.2 - 1.4 [765]	1.2 - 1.4 [XT01 B]	1.2 - 1.4 [XT03]
		Basecoats	0.8 - 1.0 [777]	0.8 - 1.0 [XT01 B]	0.8 - 1.0 [XT03]
		Clearcoats	1.0 - 1.2 [777]	1.0 - 1.2 [XT01 B]	
		Single stage paints	1.0 - 1.4 [765]	1.2 [XT01 B]	
	METAL INDUSTRY	Primers	1.4 - 1.8 [765]	1.4 - 1.6 [XT01 B]	1.4 - 1.6 [XT03]
		Enamels and clears	1.2 - 1.4 [765]	1.2 - 1.4 [XT01 B]	
		Thick coats	2.2 - 2.5 [64]		
		Silicates and abrasives	1.8 CT - 2.8 CT [67/62]		
	WOOD INDUSTRY	Dyes	0.8 - 1.0 [765]	0.8 - 1.0 [XT01 B]	0.8 - 1.0 [XT03]
		Basecoats and sealants	1.2 - 1.4 [765]	1.2 - 1.4 [XT01 B]	1.2 - 1.4 [XT03]
		Clearcoats	1.0 - 1.2 [765]	1.0 - 1.2 [XT01 B]	1.2 - 1.4 [XT03]
		Pigmented lacquers	1.0 - 1.2 [777]	1.0 - 1.2 [XT01 B]	
	GENERAL INDUSTRY	Adhesives	1.2 - 1.8 [20A]		
		Ceramic and vitro-ceramic	1.4 CT - 2.5 CT [67/64]		1.4 CT - 2.5 CT [3030]
		Paint for plastic and Soft	1.0 - 1.2 [777]	1.0 - 1.2 [XT01 B]	
		Calorific	1.0 - 1.4 [765]	1.2 - 1.4 [XT01 B]	1.2 - 1.4 [XT03]

APPLICATION GUIDE
MIXED GUN
INDUSTRY

		MODELS	X3500 / X4500 MIX
		System	Mixed
	WOOD AND METAL INDUSTRY	Enamels, clearcoats, lacquers and dyes	0.011” - 0.013”
		Basecoats, sealants and primers	0.011”
		Waterborne varnishes and enamels	0.011” - 0.013”

Industrial sprayguns

3300 GTO			3400 COMPACT		CLASSIC PRO XD	
GTO EPA EPA	GTO HVLP HVLP	GTO EVO EPA	Compact CLEAR EPA	Compact HVLP HVLP	21 EPA EPA	MINI HVLP HVLP
1.6 - 1.8 [GTO EPA]	1.6 - 1.8 [GTO HVLP]				1.6 - 1.8 [21 EPA]	
1.4 [GTO EPA]	1.4 [GTO HVLP]	1.3 - 1.4 [GTO EVO]	1.2 - 1.3 [C. CLEAR]	1.2 - 1.3 [C. HVLP]		
1.4 - 1.6 [GTO EPA]		1.4 [GTO EVO]	1.3 - 1.4 [C. CLEAR]			
1.6 [GTO EPA]		1.4 [GTO EVO]			1.6 [21 EPA]	
1.6 - 1.8 [GTO EPA]	1.8 [GTO HVLP]				1.8 [21 EPA]	2.5 [36]
1.6 [GTO EPA]		1.4 [GTO EVO]	1.3 - 1.4 [C. CLEAR]		1.6 [21 EPA]	
2.2 - 2.8 [64/62S]						2.0 [25] - 2.8 [28]
						2.0 [25] - 2.8 [28]
1.2 - 1.3 [GTO EPA]	1.2 - 1.3 [GTO HVLP]		1.0 - 1.2 [C. CLEAR]	1.2 [C. HVLP]		
1.8 [GTO EPA]	1.8 [GTO HVLP]				1.8 [21 EPA]	2.0 [25]
1.6 [GTO EPA]		1.4 - 1.6 [GTO EVO]	1.4 [C. CLEAR]		1.4 - 1.8 [21 EPA]	
1.4 - 1.6 [GTO EPA]		1.3 - 1.4 [GTO EVO]	1.3 [C. CLEAR]			
2.0 - 2.5 [GTO EPA]						2.0 [25] - 2.5 [36]
						2.0 [25] - 2.8 [28]
1.4 - 1.6 [GTO EPA]		1.3 - 1.6 [GTO EVO]	1.3 - 1.4 [C. CLEAR]	1.3 - 1.4 [C. HVLP]		
1.4 - 1.6 [GTO EPA]		1.4 [GTO EVO]	1.3 - 1.4 [C. CLEAR]	1.3 - 1.4 [C. HVLP]		

X 4100 SERIES		3300 GTO	MINI XTREME		3300 GTO	
96 Media Presión	XT01 EPA	GTO EPA EPA	MINI EPA EPA	MINI HVLP HVLP	GTO EPA EPA	GTO HVLP HVLP
1.8 [96]	1.8 [XT01]	1.8 [GTO EPA]			1.4 [GTO EPA]	1.4 [GTO HVLP]
1.4 [96]	1.4 [XT01]	1.4 - 1.6 [GTO EPA]	0.8 - 1.0 [MINI EPA]	0.8 - 1.0 [MINI HVLP]		
1.6 [96]	1.6 [XT01]	1.6 [GTO EPA]	1.0 - 1.2 [MINI EPA]	1.0 - 1.2 [MINI HVLP]		
		1.6 [GTO EPA]				
1.8 [96]	1.8 [XT01]	1.8 [GTO EPA]			1.4 - 1.6 [GTO EPA]	1.4 - 1.6 [GTO HVLP]
1.6 [96]	1.6 [XT01]	1.4 - 1.6 [GTO EPA]	1.2 [MINI EPA]		1.2 - 1.4 [GTO EPA]	
1.4 [96]	1.4 [XT01]	1.4 [GTO EPA]	0.8 - 1.0 [MINI EPA]	0.8 - 1.0 [MINI HVLP]	1.4 - 1.6 [GTO EPA]	1.4 - 1.6 [GTO HVLP]
1.6 [96]	1.6 [XT01]	1.8 [GTO EPA]			1.2 - 1.4 [GTO EPA]	
1.6 [96]	1.6 [XT01]	1.6 - 1.8 [GTO EPA]	1.0 [MINI EPA]	1.0 [MINI HVLP]		
		1.6 [GTO EPA]	1.0 [MINI EPA]			
1.4 - 1.6 [96]	1.4 - 1.6 [XT01]	1.6 - 1.8 [GTO EPA]	1.0 - 1.2 [MINI EPA]	1.0 - 1.2 [MINI HVLP]		
		1.8 [GTO EPA]				

APPLICATION GUIDE

AIRLESS GUN

INDUSTRY

	MODELS	PSAM 550 / 350 / 104
	System	Airless
WOOD AND METAL INDUSTRY	Enamels, clearcoats, lacquers and dyes	0.011”
	Basecoats, sealants and primers	0.011” - 0.013”
	Waterborne varnishes and enamels	0.011” - 0.013”
COATINGS, WALLS AND CEILINGS	Plastic paints	0.017” - 0.021”
	Waterproofing, fireproof	0.021” - 0.026”

Industrial Pumps

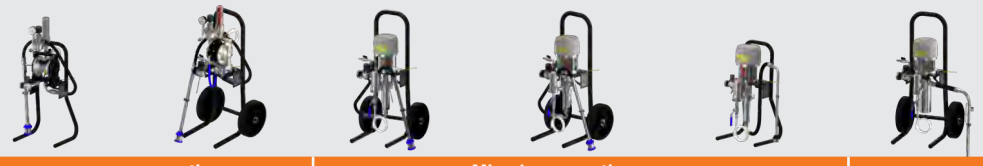

APPLICATION GUIDE

	System	Low pressure pneumatic pumps		Mixed pneumatic pumps			
	INDUSTRIAL EQUIPMENT	**DM 1/300**	**DM 1/400**	**Mack 150 X**	**Mack 320 X Mix**	**Raider 300 X Mix**	**HTV 250 X**
TECHNICAL DATA	Air inlet	Max. 6 bar	Max. 7 bar	Max. 7 bar	Max. 7 bar	Max. 6.5 bar	Max. 7 bar
	Air consumption	380 L/min.	580 L/min.	245 L/min.	610 L/min.	370 L/min.	448 L/min.
	Dimensions (cm.)	32.4 x 41.5 x 88	46.5 x 50.1 x 95.2	48 x 47 x 87.5	48 x 47 x 87.5	41.5 x 39 x 74.5	46.5 x 46 x 87.5
	Weight	10,5 Kg.	18,5 Kg.	16,8 Kg.	17 Kg.	15,5 Kg.	30 Kg.
	Maximum pressure	6 bar	7 bar	91 bar	226 bar	200 bar	176 bar
	Maximum flow	30 L/min.	40 L/min.	2,7 L/min.	2,7 L/min.	1,8 L/min.	2,54 L/min.
	Maximum Tip			0.018”	0.018”	0.013”	0.018”
ACCESSORIES	GUN	X 4100 Series Mini Xtreme Pressure HVLP/EPA V4000/V4/V5/V6		Mini Xtreme Mix			Mini Xtreme Mix V7 Mix
	HOSES	Air + Product aerographic hose 5 m. 86463818 10 m. 86463819		Air + Product mixed hose 5 m. 86463804 10 m. 86463805			Air + Product mixed hose 7 m. 86463869
	PRODUCT NOZZLE / TIP	According to Application		Standard Mixed Tip 814 605 XX			Extra Finish Tip 814 612 XX
INDUSTRIAL applications	Shop Primer	•	•				
	Primer averages	•	•				
	Thick coat Primer						
	Zinc primers	•	•				
	Single Stage	•	•	•	•	•	•
	Enamels	•	•	•	•	•	•
	Clearcoats	•	•	•	•	•	•
	Glues, adhesives	•	•				
WOOD applications	Dyes	•	•	•	•	•	
	Basecoats	•	•	•	•	•	•
	Clears	•	•	•	•	•	•
	Pigmented lacquers	•	•	•		•	•
	Waterborne clears	•	•	•	•	•	•

	System	Airless electric pumps			Airless petrol pump
	CONSTRUCTION EQUIPMENT	**Atlanta 200 Plus**	**Atlanta 500**	**Atlanta 800**	**Atlanta 800G**
TECHNICAL DATA	Voltage / Frequency	220V/50Hz	220V/50Hz	220V/50Hz	Petrol
	Air consumption	1 HP	2 HP	2.9 HP	5.5 HP
	Dimensions (mm.)	420 x 250 x 630	650 x 400 x 600		
	Weight	27 Kg.	53 Kg.	72 Kg.	
	Maximum Pressure	180 bar	220 bar	220 bar	220 bar
	Maximum Flow	2 L/min.	5 L/min.	9 L/min.	8.5 L/min.
	Maximum Tip	0.018”	0.026”	0.043”	0.036”
ACCESSO-RIES	GUN	PSAM 104/500			PSAM 500
	HOSES	Dispersions airless hose 10 m. 864 638 02 / 20 m. 864 638 03			
	PRODUCT NOZZLE / TIP	Rotating Airless Tip			
CONSTRUCTION applications	Undercoats/Primers	•	•	•	•
	Enamels	•	•		
	Clearcoats	•	•		
	Plastic paints		•	•	•
	Chlorinated rubber			•	•
	Waterproofing		•	•	•
	Fireproof	•	•	•	•
	Bituminous			•	•
	Thick Epoxi coat			•	•

Industrial Pumps

Mixed Bellows Pumps			Airless pneumatic pumps				Airless electric pumps		
HT 10 X	**HT 15 X**	**HT 25 X**	**Raider 300 X**	**Mack 320 X**	**Mack 400 X**	**Mack 600 X**	**Atlanta 200 Plus**	**Atlanta 500**	**Atlanta 800**
Max. 6 bar			Max. 6.5 bar	Max. 7 bar	Max. 6 bar		220V/50Hz	220V/50Hz	220V/50Hz
646 L/min.	800 L/min.	1,326 L/min.	245 L/min.	610 L/min.	1,500 L/min.		1 HP	2 HP	2,9 HP
48 x 47 x 87.5			41.5 x 39 x 74.5	48 x 47 x 87.5	54.5 x 54.6 x 100.7		42 x 25 x 63	65 x 40 x 60	
41 Kg.	42 Kg.	48 Kg.	15,5 Kg.	17 Kg.	62 Kg.	63 Kg.	27 Kg.	53 Kg.	72 Kg.
60 bar	90 bar	150 bar	200 bar	226 bar	240 bar	360 bar	180 bar	220 bar	220 bar
9.75 L/min.			1.8 L/min.	2.7 L/min.	7.2 L/min.	5.2 L/min.	2 L/min.	5 L/min.	9 L/min.
0.018”			0.013”	0.018”	0.032”		0.018”	0.026”	0.043”
Mini Xtreme Mix V7 Mix			PSAM 104/107/110						
Air + Product mixed hose 10 m. 86463805			Standard airless hose 10 m. 86463804 15 m. 86463805				Dispersions airless hose 10 m. 86463802	Dispersions airless hose 10 m. 86463802 15 m. 86463803	
Extra Finish Tip 814 612 XX			Rotating Airless Tip 814 611 XX Swivel head 81461101				Rotating Airless Tip 814 611 XX Swivel head 81461101		
			•	•	•				
				•	•		•	•	•
									•
	•	•	•	•	•		•	•	•
•	•	•	•	•	•		•	•	•
•	•	•	•				•		
			•	•	•				
•	•	•	•	•	•		•	•	
•	•	•	•	•	•		•	•	
•	•	•							
•	•	•	•	•	•		•	•	

SAGOLA®
an Elcometer company

SAGOLA S.A.U.
Urartea, 6 · 01010
Vitoria-Gasteiz (Álava) SPAIN
Tel.: (+34) 945 214 150
sagola@sagola.com
www.sagola.com

Edición ES 04/2026 - 70110105